CASE CONSTRUCTION

WHEELED EXCAVATOR

WX185 - Series 2

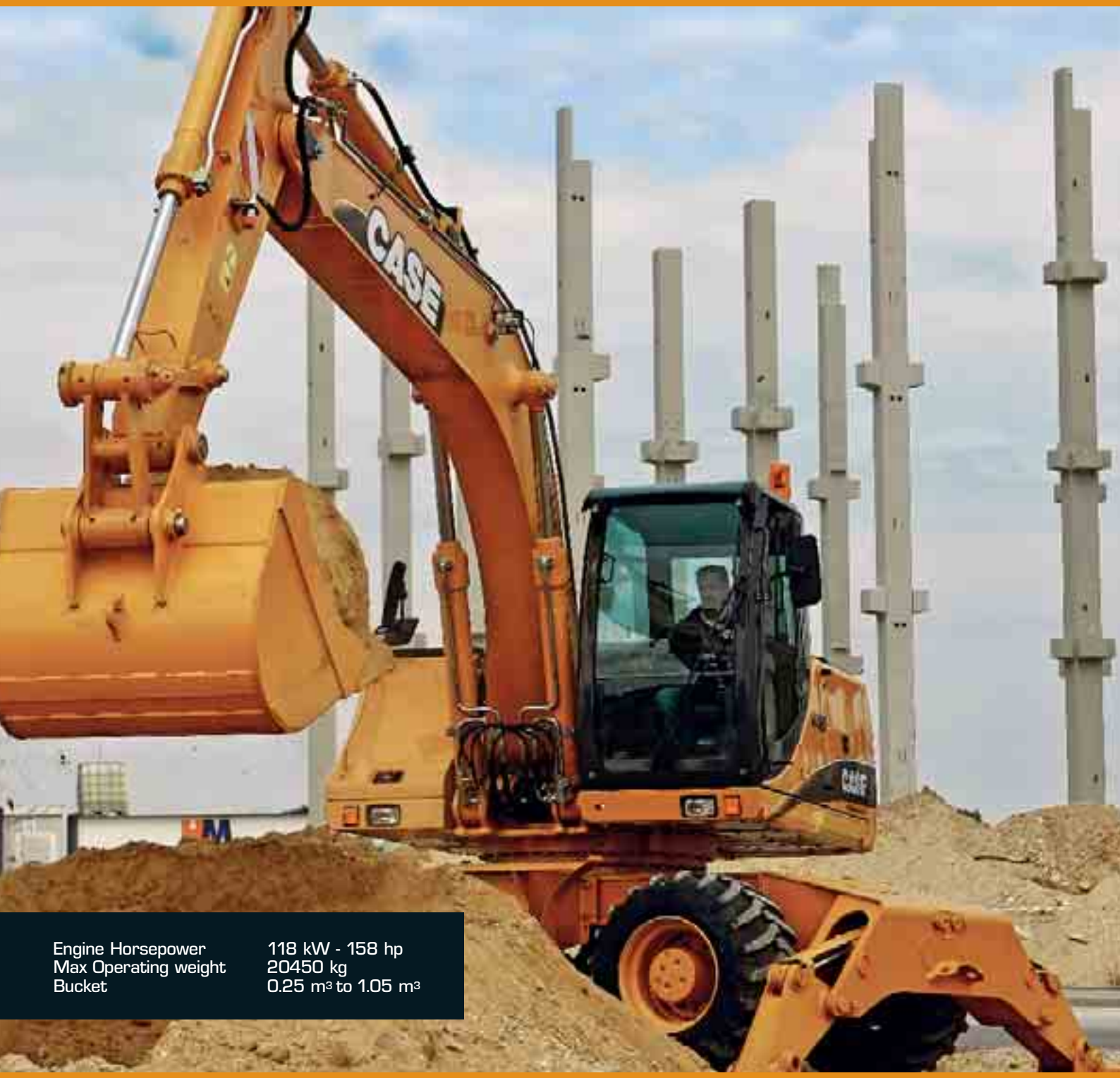

Engine Horsepower	118 kW - 158 hp
Max Operating weight	20450 kg
Bucket	0.25 m^3 to 1.05 m^3

SERVICE ACCESS

The WX series of wheeled excavators use the latest Family III Case diesel engines. All engines feature extended 500 hour service intervals, for minimal downtime, and the machines have easy access to all service and diagnostic points. An ecological oil drain reduces the risk of ground contamination during regular maintenance work.
Ease of service. Minimum downtime.

OPERATOR SECURITY

Large volume fully glazed cab features outstanding visibility all around the machine. An air suspension seat and tilting steering column ensure that all operators can achieve a comfortable driving position, reducing fatigue and increasing productivity. Automatically operating brakes and front axle lock, along with direction control switch on the joystick reduce operator effort, while Digipower management and fine grading mode allow the operator total control of the engine and hydraulic power.
Reduced fatigue. Maximum productivity.

CASE PERFORMANCE

The WX machines have a compact upperstructure that promotes high lifting and digging performance. With full blade and stabiliser independence, and mechanically lockable stabiliser pads, the WX excavators offer a solid working platform. High engine output with Power Boost function ensures total productivity, while a PowerShift transmission allows optional travel speeds of 30 km/h with on-the-move gear shifting. Quick coupler compatible with previous generation machines and quick connectors on auxiliary hydraulics provides rapid changeover between attachments, increasing machine versatility.
Designed to work. Built to perform.

SECURE OPERATION

Case inching and extra slow speed setting, along with road travel mode swing and attachment cut-out, provide safe operation in all conditions. Engine safe warm-up control and automatic battery cut-off reduce the possibility of damage to the engine and hydraulic system at start-up. Stabiliser cylinder protection cuts the risk of damage in rough ground and abrasive material. Integrated anti-theft device provides peace of mind for Case WX customers.
Safety First. Investment Protection.

ENGINE

The WX185 uses a six cylinder Case engine for maximum torque and smooth power. This EU Tier III compliant engine is turbocharged and intercooled for optimised clean combustion and high power output. The engine has been designed for maximum reliability and durability, with an auto warm-up feature ensuring long service life and minimal downtime.

UNDERCARRIAGE

A two speed range transmission offers an optional maximum travel speed between job sites of 30 km/h. Excellent ground clearance, with the option of a two-piece drive shaft, offers true off-road capability for maximum versatility on site. As with all Case WX machines the WX185 has the Case inching control, which allows the operator to gradually move the machine for safe and accurate positioning. The machine is available with single wheels or double wheels with a twinning ring, allowing the customer to tailor the layout to meet their application.

VISIBILITY

Large glass area with two-piece full height front windscreen offers unparalleled visibility all around the machine. The operator has a clear view to the work area when digging and loading, and to the road ahead when travelling the machine between job sites. A low engine canopy to the rear of the machine provides a clear view behind the excavator when manoeuvring on confined sites.

OPERATOR'S CAB

Ergonomic design with large tinted glass area provides feeling of space and excellent all round visibility, ensuring safe operation on site. Large roof window with shade, fully adjustable suspension seat, adjustable tilt steering column and exceptionally low internal noise levels allow fatigue-free operation and full day productivity. Large LCD display provides all operating information and diagnostic functions, along with integrated working mode display. All major operating controls, including travel direction, attachment and blade/stabiliser selection, levelling mode and power boost function are integrated into the joystick levers, reducing operator effort and ensuring total control of the machine.

HYDRAULICS

Clean, easy to maintain hydraulic valve layout. The Case Digipower hydraulic control system monitors the main pumps and regulates engine power to meet the needs of the operator. The WX machines offer a range of selectable power levels, for specific digging and lifting tasks, including a levelling mode for fine grading work. PowerBoost is standard in the lifting modes and works for 8 seconds in all other modes on request.

STABILIZERS

Customers can choose between a stabilisers, blade or a combination of the two, thanks to the modular design of the Case WX chassis. The stabilisers and dozer blade are independently controlled, to allow for levelling on rough ground.

ACCESSIBILITY

Even with the reduced tail radius of the Case WX, the machine retains the Case access catwalk behind the cab, offering the service engineer excellent access to the regular service and maintenance points and providing a safe working area. A lift up engine canopy provides a clear view to the top of the engine, the hydraulic valves and the cooling pack.


CASE

SPECIFICATIONS

ENGINE

Make _____ CASE - Family III
Model _____ 667TA/MEB
Type _____ 6 cyl. turbo charged, direct injection, intercooler
Displacement _____ 6.7 l
Bore x stroke _____ 104 x 132 mm
Output power (ISO 14396) _____ 118 kW/158 hp
Rated speed _____ 2000 rpm

HYDRAULIC SYSTEM

Main pumps _____ 3 variable displacement, axial piston
Total maximum flow _____ 2 x 155 lpm + 110 lpm
Attachment maximum pressure/PowerBoost 350/370 bar
Travel maximum pressure _____ 370 bar
Swing maximum pressure _____ 360 bar

SWING

Swing speed _____ 9 rpm
Swing torque _____ 55 kNm
Tail swing radius _____ 2.15 m

TRAVEL

Maximum travel speed (field range) _____ 8 km/h
Maximum travel speed (road range) _____ 20 or 30 km/h
Maximum drawbar pull (field range) _____ 115 kN

ELECTRICAL SYSTEM

Voltage _____ 24 V
Batteries _____ 2 x 12 V - 100 Ah
Alternator _____ 70 A
Automatic isolator switch and 12 V power supply in cab as standard.

CIRCUIT AND COMPONENT CAPACITIES

Engine oil _____ 16 l
Cooling circuit _____ 30 l
Fuel tank _____ 360 l
Hydraulic tank _____ 140 l
Swing gear _____ 3.5 l

TYRES

4 wheels _____ 18 -19.5 XF
8 wheels with twinning rings _____ 10.00 - 20
11.00-20
600/40 - 22.5

SHIPPING DIMENSIONS AND WEIGHT

	PL			P2A			P2AL			P4A		
	Rear Blade			Rear Stabilisers			Front Blade + Rear Stab.			4 Stabilisers		
MONOBOOM	max length mm	max height mm	kg	max length mm	max height mm	kg	max length mm	max height mm	kg	max length mm	max height mm	kg
Dipper 2.00 m	8573	3100	18650	8573	3100	18700 19200*	8573	3100	19250 19750*	8573	3100	19750
Dipper 2.40 m	8603	3100	18750	8603	3100	18800 19300*	8603	2983	19350 19850*	8603	2983	19850
Dipper 2.80 m	8631	3173	18850	8631	3173	18900 19400*	8631	3173	19450 19950*	8631	3173	19950

	PL			P2A			P2AL			P4A		
	Rear Blade			Rear Stabilisers			Front Blade + Rear Stab.			4 Stabilisers		
ARTICULATED BOOM	max length mm	max height mm	kg	max length mm	max height mm	kg	max length mm	max height mm	kg	max length mm	max height mm	kg
Dipper 2.00 m	8724	3100	19200	8724	3100	19300	8724	3100	19700	8724	3100	20250
Dipper 2.40 m	8687	3100	19300	8687	3100	19400	8687	3100	19800	8687	3100	20350
Dipper 2.80 m	8676	3100	19400	8676	3100	19500	8676	3100	19900	8676	3100	20450

Weights are indicated fitted with a 495 kg bucket
* Option counterweight 5.1 t

GENERAL DIMENSIONS

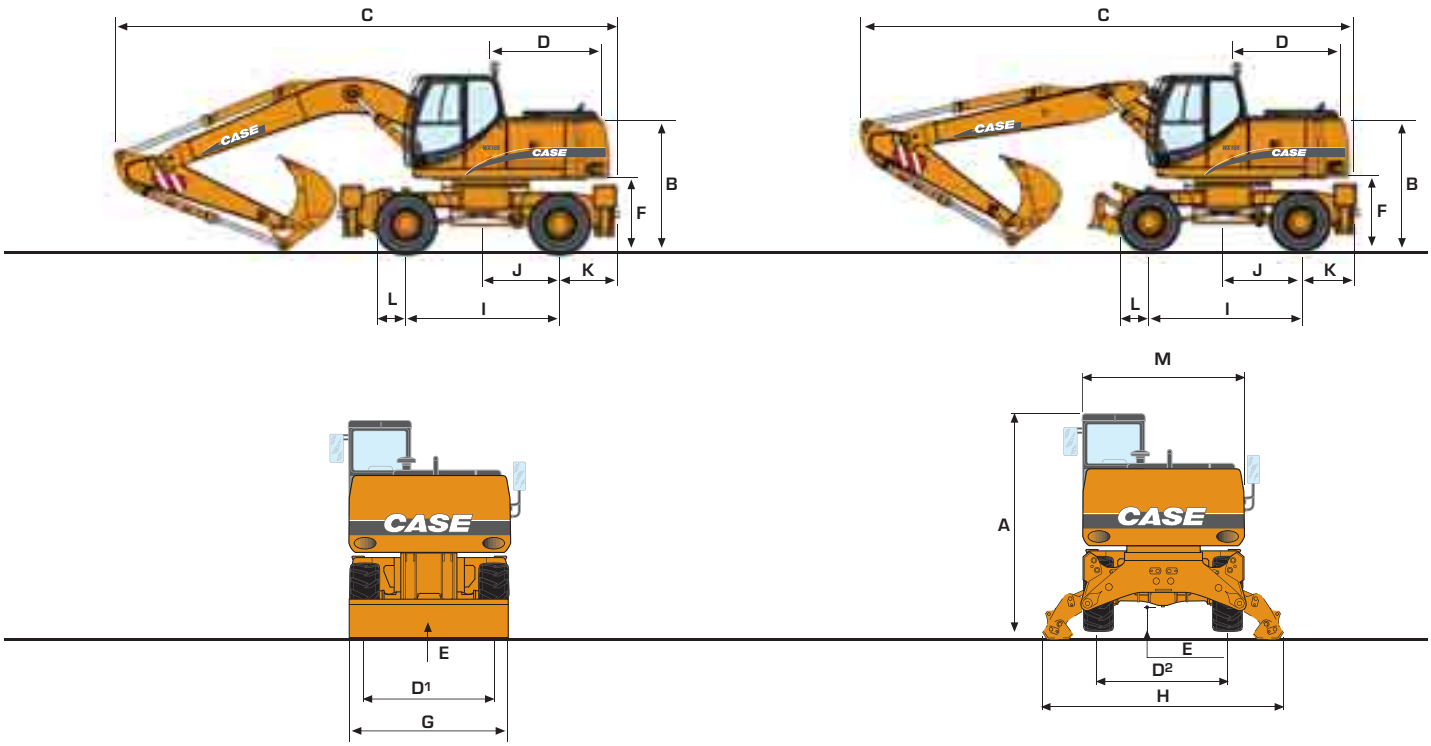

			MONOBOOM	ARTICULATED BOOM
A	Overall height (with attachment)	m	3.10	3.10
B	Height of machine	m	2.40	2.40
C	Overall length	m	8.57	8.72
D	Swing tail radius	m	2.15	2.15
D^1	Gauge with 4 wheels	m	1.89	1.89
D^2	Gauge with 8 wheels	m	1.91	1.91
E	Ground clearance of undercarriage	m	0.37	0.37
F	Ground clearance of uppercarriage	m	1.28	1.28
G	Width unit blade/stabilizers	m	2.53/2.54	2.53/2.54
H	Width over stabs (max height)	m	3.73	3.73
I	Wheel base	m	2.65	2.65
J	Dimension rear axle to center		1.20	1.20
	Undercarriage rear			
K	Rear Stabilisers	m	1.21	1.21
L	Undercarriage front end	m	0.56	0.56
M	Width of uppercarriage	m	2.50	2.50

Tires type 600/40 - 22,5 I-331 Alliance
Available with 2.75 m wide axles also.

BUCKETS

GENERAL PURPOSE

SAE capacity	l	260	380	500	630	700	760	900	1030
Width	mm	450	600	750	900	1000	1100	1200	1350
Weight	kg	331	370	408	456	482	517	543	606

HEAVY DUTY

SAE capacity	l	260	380	500	630	700	760	900	1380
Width	mm	450	600	750	900	1000	1100	1200	1350
Weight	kg	357	397	437	487	514	550	577	642

PERFORMANCE DATA

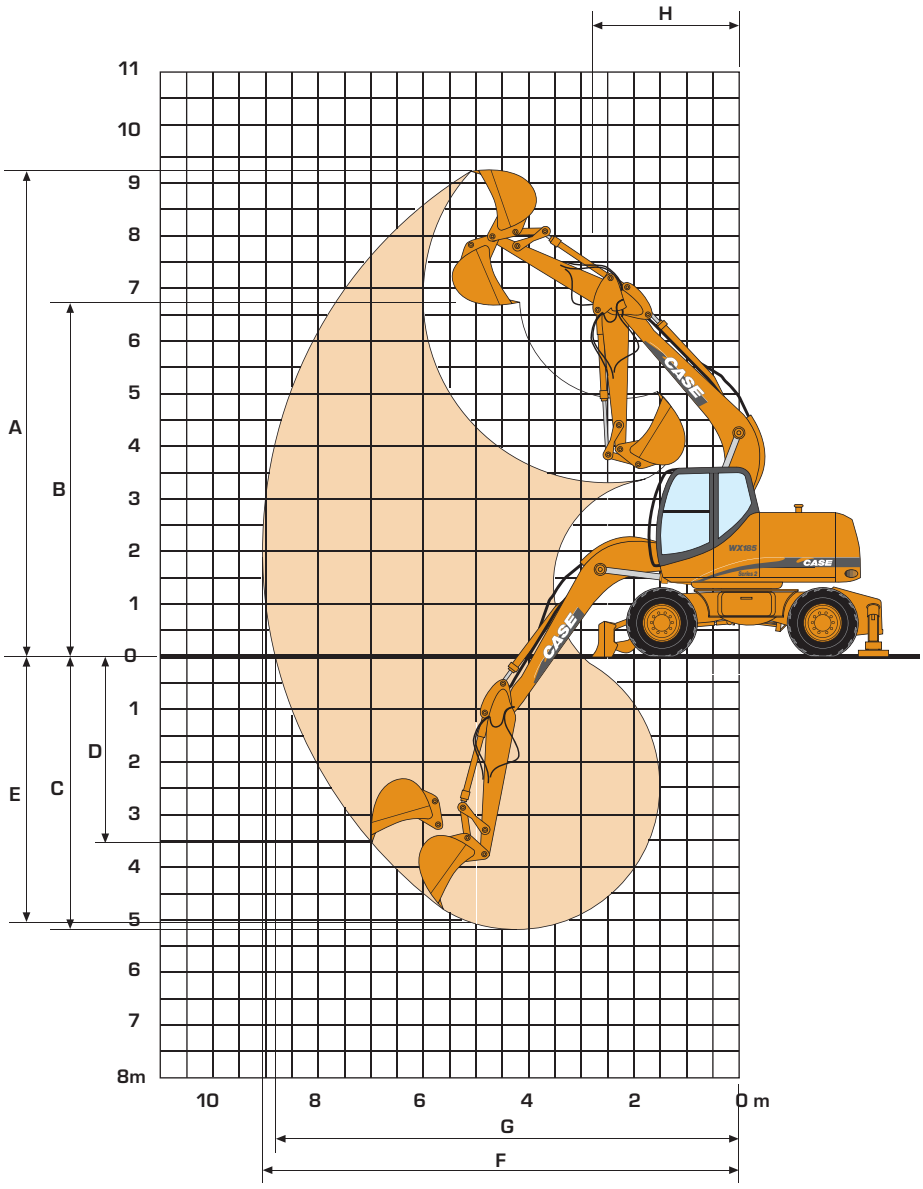

		MONO BOOM 5.20 m			ARTICULATED BOOM 5.30 m		
DIPPERSTICK		**2.00 m**	**2.40 m**	**2.80 m**	**2.00 m**	**2.40 m**	**2.80 m**
A Max. digging height	m	9.0	9.2	9.4	9.9	10.2	10.5
B Max. loading height	m	6.4	6.6	6.8	7.2	7.5	7.8
C Max. digging depth	m	5.2	5.6	6.0	5.2	5.6	6.0
D Max. vert. wall digging depth	m	3.1	3.5	3.8	3.5	3.8	4.1
E Max. depth of cut for 8' level bottom	m	4.9	5.4	5.8	5.1	5.5	5.9
F Max. digging reach	m	8.8	9.2	9.6	9.0	9.3	9.7
G Max. digging reach at ground level	m	8.6	9.0	9.4	8.8	9.2	9.6
H Min. front swing radius	m	3.2	2.8	2.4	2.7	2.9	3.0
Bucket breakout force (370 bar) SAE	kN	137.7	137.7	137.7	137.7	137.7	137.7
Stick crowd force (370 bar) SAE	kN	111.6	99.3	89.4	111.6	99.3	89.4


CASE


CASE

LIFTING CAPACITY
MONO BOOM

Values are expressed in tons

Front / 90°		REACH										
		3.0 m		4.5 m		6.0 m		7.5 m		At max reach		m

2.00 m dipper, counterweight 5.15 t, weight of Quick Coupler 295 kg

7.5 m	Rear dozer up									3.4*	3.4*	5.1
	Rear dozer down									3.4*	3.4*	5.1
	2 set stabs down									3.4*	3.4*	5.1
	Dozer and stabs down									3.4*	3.4*	5.1
6.0 m	Rear dozer up					4.8	2.9			3.0*	2.5	6.5
	Rear dozer down					5.2*	3.3			3.0*	2.8	6.3
	2 set stabs down					5.2*	4.1			3.0*	3.0*	6.5
	Dozer and stabs down					5.2*	5.2*			3.0*	3.0*	6.5
4.5 m	Rear dozer up			6.8*	4.5	4.7	2.8			2.9*	2.0	7.3
	Rear dozer down			6.8*	5.1	5.7*	3.2			2.9*	2.3	7.3
	2 set stabs down			6.8*	6.5	5.7*	4.0			2.9*	2.9*	7.3
	Dozer and stabs down			6.8*	6.8*	5.7*	5.3			2.9*	2.9*	7.3
3.0 m	Rear dozer up			7.1	4.0	4.5	2.6	3.2	1.8	2.9*	1.7	7.7
	Rear dozer down			8.4*	4.7	6.3*	3.0	4.6*	2.1	2.9*	2.3	7.7
	2 set stabs down			8.4*	6.0	6.3*	3.9	4.6*	2.7	2.9*	2.6	7.7
	Dozer and stabs down			8.4*	8.1	6.3*	5.1	4.6*	3.6	2.9*	2.9*	7.7
1.5 m	Rear dozer up			6.6	3.6	4.3	2.4	3.1	1.7	2.9	1.6	7.8
	Rear dozer down			9.7*	4.3	6.9*	2.8	4.9	2.0	3.2*	1.9	7.8
	2 set stabs down			9.7*	5.5	6.9*	3.6	5.4	2.6	3.2*	2.4	7.8
	Dozer and stabs down			9.7*	7.6	6.9*	4.9	5.5*	3.5	3.2*	3.2*	7.8
0.0 m	Rear dozer up			6.4	3.5	4.2	2.3	3.0	1.7	3.0	1.6	7.6
	Rear dozer down			9.9*	4.1	6.9	2.7	4.7*	2.0	3.6*	1.9	7.6
	2 set stabs down			9.9*	5.3	7.1*	3.5	4.7*	2.5	3.6*	2.5	7.6
	Dozer and stabs down			9.9*	7.4	7.1*	4.8	4.7*	3.4	3.6*	3.4	7.6
-1.5 m	Rear dozer up	10.7*	6.4	6.4	3.4	4.1	2.3			3.3	1.8	7.0
	Rear dozer down	10.7*	7.6	9.2*	4.0	6.7*	2.7			4.6*	2.2	7.0
	2 set stabs down	10.7*	10.4	9.2*	5.3	6.7*	3.5			4.6*	2.8	7.0
	Dozer and stabs down	10.7*	10.7*	9.2*	7.3	6.7*	4.7			4.6*	3.8	7.0
-3.0 m	Rear dozer up	10.1*	6.6	6.5	3.5	4.2	2.4			4.2	2.4	6.0
	Rear dozer down	10.1*	7.8	7.5*	4.1	5.0*	2.8			5.0*	2.8	6.0
	2 set stabs down	10.1*	10.1*	7.5*	5.4	5.0*	3.6			5.0*	3.6	6.0
	Dozer and stabs down	10.1*	10.1*	7.5*	7.5	5.0*	4.8			5.0*	4.8	5.8

* Hydraulically limited

WX 185

LIFTING CAPACITY
MONO BOOM

Values are expressed in tons

Front / 90°		REACH										
		3.0 m		4.5 m		6.0 m		7.5 m		At max reach		m

2.40 m dipper, counterweight 5.15 t, weight of Quick Coupler 295 kg

7.5 m	Rear dozer up									2.7*	2.7*	5.7
	Rear dozer down									2.7*	2.7*	5.7
	2 set stabs down									2.7*	2.7*	5.7
	Dozer and stabs down									2.7*	2.7*	5.7
6.0 m	Rear dozer up					4.9	2.9			2.4*	2.2	6.9
	Rear dozer down					4.9*	3.4			2.4*	2.4*	6.9
	2 set stabs down					4.9*	4.2			2.4*	2.4*	6.9
	Dozer and stabs down					4.9*	4.9*			2.4*	2.4*	6.9
4.5 m	Rear dozer up			6.2*	4.6	4.8	2.8	3.2	1.9	2.3*	1.8	7.7
	Rear dozer down			6.2*	5.2	5.3*	3.2	3.4*	2.2	2.3*	2.0	7.7
	2 set stabs down			6.2*	6.2*	5.3*	4.1	3.4*	2.8	2.3*	2.3*	7.7
	Dozer and stabs down			6.2*	6.2*	5.3*	5.3*	3.4*	3.4*	2.3*	2.3*	7.7
3.0 m	Rear dozer up			7.2	4.1	4.6	2.6	3.2	1.8	2.4*	1.5	8.1
	Rear dozer down			7.9*	4.8	6.0*	3.0	5.0	2.1	2.4*	1.8	8.1
	2 set stabs down			7.9*	6.1	6.0*	3.9	5.1*	2.7	2.4*	2.3	8.1
	Dozer and stabs down			7.9*	7.9*	6.0*	5.1	5.1*	3.6	2.4*	2.4*	8.1
1.5 m	Rear dozer up			6.7	3.7	4.3	2.4	3.1	1.7	2.5*	1.5	8.2
	Rear dozer down			9.4*	4.3	6.7*	2.8	4.9	2.0	2.5*	1.7	8.2
	2 set stabs down			9.4*	5.6	6.7*	3.6	5.3*	2.6	2.5*	2.2	8.2
	Dozer and stabs down			9.4*	7.7	6.7*	4.9	5.3*	3.5	2.5*	2.5*	8.2
0.0 m	Rear dozer up	5.7*	5.7*	6.4	3.4	4.2	2.3	3.0	1.6	2.7	1.5	8.0
	Rear dozer down	5.7*	5.7*	9.9*	4.0	6.9	2.7	4.8	1.9	2.9*	1.7	8.0
	2 set stabs down	5.7*	5.7*	9.9*	5.3	7.0*	3.5	5.3	2.5	2.9*	2.3	8.0
	Dozer and stabs down	5.7*	5.7*	9.9*	7.4	7.0*	4.7	5.4*	3.4	2.9*	2.9*	8.0
-1.5 m	Rear dozer up	9.8*	6.2	6.3	3.4	4.1	2.2			3.0	1.6	7.4
	Rear dozer down	9.8*	7.5	9.4*	4.0	6.8*	2.6			3.5*	1.9	7.4
	2 set stabs down	9.8*	9.8*	9.4*	5.2	6.8*	3.4			3.5*	2.5	7.4
	Dozer and stabs down	9.8*	9.8*	9.4*	7.3	6.8*	4.7			3.5*	3.4	7.4
-3.0 m	Rear dozer up	11.3*	6.4	6.4	3.4	4.1	2.3			3.7	2.0	6.5
	Rear dozer down	11.3*	7.7	8.0*	4.0	5.7*	2.7			4.8*	2.4	6.5
	2 set stabs down	11.3*	10.5	8.0*	5.3	5.7*	3.5			4.8*	3.1	6.5
	Dozer and stabs down	11.3*	11.3*	8.0*	7.4	5.7*	4.7			4.8*	4.2	6.5
-4.5 m	Rear dozer up			4.8*	3.6					4.0*	3.2	4.9
	Rear dozer down			4.8*	4.3					4.0*	3.8	4.9
	2 set stabs down			4.8*	4.8*					4.0*	4.0*	4.9
	Dozer and stabs down			4.8*	4.8*					4.0*	4.0*	4.9

* Hydraulically limited

Series 2

LIFTING CAPACITY
MONO BOOM

Values are expressed in tons

Front / 90°		REACH										
		3.0 m		4.5 m		6.0 m		7.5 m		At max reach		m

2.80 m dipper, counterweight 5.15 t, weight of Quick Coupler 295 kg

7.5 m	Rear dozer up					2.9*	2.9*			2.2*	2.2*	6.2
	Rear dozer down					2.9*	2.9*			2.2*	2.2*	6.2
	2 set stabs down					2.9*	2.9*			2.2*	2.2*	6.2
	Dozer and stabs down					2.9*	2.9*			2.2*	2.2*	6.2
6.0 m	Rear dozer up					4.5*	3.0			2.0*	2.0	7.4
	Rear dozer down					4.5*	3.4			2.0*	2.0*	7.4
	2 set stabs down					4.5*	4.2			2.0*	2.0*	7.4
	Dozer and stabs down					4.5*	4.5*			2.0*	2.0*	7.4
4.5 m	Rear dozer up					4.8	2.9	3.3	1.9	1.9*	1.6	8.1
	Rear dozer down					4.9*	3.3	3.9*	2.2	1.9*	1.9*	8.1
	2 set stabs down					4.9*	4.1	3.9*	2.8	1.9*	1.9*	8.1
	Dozer and stabs down					4.9*	4.9*	3.9*	3.7	1.9*	1.9*	8.1
3.0 m	Rear dozer up	11.6*	7.8	7.3*	4.2	4.6	2.7	3.2	1.8	1.9*	1.4	8.5
	Rear dozer down	11.6*	9.1	7.3*	4.8	5.7*	3.1	4.8*	2.1	1.9*	1.6	8.5
	2 set stabs down	11.6*	11.6*	7.3*	6.1	5.7*	3.9	4.8*	2.7	1.9*	1.9*	8.5
	Dozer and stabs down	11.6*	11.6*	7.3*	7.3*	5.7*	5.2	4.8*	3.6	1.9*	1.9*	8.5
1.5 m	Rear dozer up			6.7	3.7	4.3	2.4	3.0	1.7	2.1*	1.3	8.6
	Rear dozer down			8.9*	4.3	6.4*	2.8	4.9	2.0	2.1*	1.6	8.6
	2 set stabs down			8.9*	5.6	6.4*	3.6	5.2*	2.6	2.1*	2.1	8.6
	Dozer and stabs down			8.9*	7.7	6.4*	4.9	5.2*	3.5	2.1*	2.1*	8.6
0.0 m	Rear dozer up	6.1*	6.1*	6.4	3.4	4.1	2.3	2.9	1.6	2.3*	1.3	8.4
	Rear dozer down	6.1*	6.1*	9.7*	4.0	6.9	2.6	4.8	1.9	2.3*	1.6	8.4
	2 set stabs down	6.1*	6.1*	9.7*	5.3	6.9*	3.5	5.3	2.5	2.3*	2.1	8.4
	Dozer and stabs down	6.1*	6.1*	9.7*	7.3	6.9*	4.7	5.3*	3.4	2.3*	2.3*	8.4
-1.5 m	Rear dozer up	9.2*	6.1	6.2	3.3	4.0	2.2	2.9	1.6	2.7	1.5	7.9
	Rear dozer down	9.2*	7.3	9.6*	3.9	6.8	2.6	4.7	1.8	2.8*	1.7	7.9
	2 set stabs down	9.2*	9.2*	9.6*	5.1	6.8*	3.4	5.1*	2.4	2.8*	2.3	7.9
	Dozer and stabs down	9.2*	9.2*	9.6*	7.2	6.8*	4.6	5.1*	3.3	2.8*	2.8*	7.9
-3.0 m	Rear dozer up	12.3*	6.2	6.3	3.3	4.0	2.2			3.3	1.8	7.0
	Rear dozer down	12.3*	7.5	8.4*	3.9	6.0*	2.6			3.8*	2.1	7.0
	2 set stabs down	12.3*	10.3	8.4*	5.2	6.0*	3.4			3.8*	2.7	7.0
	Dozer and stabs down	12.3*	12.3	8.4*	7.2	6.0*	4.6			3.8*	3.7	7.0
-4.5 m	Rear dozer up	8.4*	6.5	5.9*	3.5					4.2*	2.6	5.5
	Rear dozer down	8.4*	7.8	5.9*	4.1					4.2*	3.1	5.5
	2 set stabs down	8.4*	8.4*	5.9*	5.4					4.2*	4.0	5.5
	Dozer and stabs down	8.4*	8.4*	5.9*	5.9*					4.2*	4.2*	5.5

* Hydraulically limited

WX185

LIFTING CAPACITY
ARTICULATED BOOM

Values are expressed in tons

2.00 m dipper, counterweight 4.65 t, weight of Quick Coupler 295 kg (PL configurations: counterweight 5.15 t)

Front / 90°		REACH										
		3.0 m		4.5 m		6.0 m		7.5 m		At max reach		m
7.5 m	Rear dozer up			5.7*	4.9					3.6*	3.5	5.3
	Rear dozer down			5.7*	5.5					3.6*	3.6*	5.3
	2 set stabs down			5.7*	5.7*					3.6*	3.6*	5.3
	Dozer and stabs down			5.7*	5.7*					3.6*	3.6*	5.3
6.0 m	Rear dozer up			5.7*	4.9	4.9	3.0			3.1*	2.3	6.7
	Rear dozer down			5.7*	5.5	5.0*	3.4			3.1*	2.7	6.7
	2 set stabs down			5.7*	5.7*	5.0*	4.0			3.1*	3.1*	6.7
	Dozer and stabs down			5.7*	5.7*	5.0*	5.0*			3.1*	3.1*	6.7
4.5 m	Rear dozer up	9.0*	8.8	6.5*	4.8	4.9	3.1			2.9*	1.9	7.5
	Rear dozer down	9.0*	9.0*	6.5*	5.4	5.3*	3.5			2.9*	2.2	7.5
	2 set stabs down	9.0*	9.0*	6.5*	6.3	5.3*	4.1			2.9*	2.6	7.5
	Dozer and stabs down	9.0*	9.0*	6.5*	6.5*	5.3*	5.2			2.9*	2.9*	7.5
3.0 m	Rear dozer up	10.9*	8.3	7.4	4.6	4.8	3.1	3.2	1.8	2.9	1.6	7.9
	Rear dozer down	10.9*	9.4	7.8*	5.2	5.8*	3.5	4.5*	2.1	3.0*	1.9	7.9
	2 set stabs down	10.9*	10.9*	7.8*	6.1	5.8*	4.0*	4.5*	2.6	3.0*	2.3	7.9
	Dozer and stabs down	10.9*	10.9*	7.8*	7.8*	5.8*	5.1	4.5*	3.4	3.0*	3.0*	7.9
1.5 m	Rear dozer up	12.3*	8.1*	7.3	4.5	4.8	2.9	3.2	1.8	2.8	1.5	8.0
	Rear dozer down	12.3*	9.3	9.4*	5.1	6.5*	3.3	4.9*	2.1	3.1*	1.8	8.0
	2 set stabs down	12.3*	11.3	9.4*	6.0	6.5*	4.0	4.9*	2.5	3.1*	2.2	8.0
	Dozer and stabs down	12.3*	12.3*	9.4*	7.7	6.5*	5.1	4.9*	3.4	3.1*	3.0	8.0
0.0 m	Rear dozer up	14.2	7.8	7.3	4..3	4.6	2.7	3.0	1.7	2.9	1.6	7.7
	Rear dozer down	14.8*	9.2	9.8*	5.0	7.0*	3.1	4.8*	2.0	3.5*	1.8	7.7
	2 set stabs down	14.8*	11.4	9.8*	6.0	7.0*	3.7	4.8*	2.4	3.5*	2.2	7.7
	Dozer and stabs down	14.8*	14.8*	9.8*	7.8	7.0*	4.9	4.8*	3.3	3.5*	3.1	7.7
-1.5 m	Rear dozer up	14.7	7.4	7.2	4.1	4.4	2.4			3.2	1.7	7.2
	Rear dozer down	16.5*	8.8	10.0*	4.7	7.2*	2.8			4.2*	2.1	7.2
	2 set stabs down	16.5*	11.1	10.0*	5.7	7.2*	3.4			4.2*	2.5	7.2
	Dozer and stabs down	16.5*	15.9*	10.0*	7.8	7.2*	4.7			4.2*	3.4	7.2
-3.0 m	Rear dozer up	14.5	7.3	6.8	3.8	4.2	2.3					6.1
	Rear dozer down	17.1*	8.6	10.0*	4.4	5.1*	2.7					6.1
	2 set stabs down	17.1*	10.9	10.0*	5.4	5.1*	3.3					6.1
	Dozer and stabs down	17.1*	16.2	10.0*	7.4	5.1*	4.6					6.1

* Hydraulically limited

LIFTING CAPACITY
ARTICULATED BOOM

Values are expressed in tons

2.40 m dipper, counterweight 4.65 t, weight of Quick Coupler 295 kg (PL configurations: counterweight 5.15 t)

Front / 90°		REACH										
		3.0 m		4.5 m		6.0 m		7.5 m		At max reach		m
9.0 m	Rear dozer up									4.1*	4.1*	3.7
	Rear dozer down									4.1*	4.1*	3.7
	2 set stabs down									4.1*	4.1*	3.7
	Dozer and stabs down									4.1*	4.1*	3.7
7.5 m	Rear dozer up			5.3*	5.0					2.9*	2.9*	5.9
	Rear dozer down			5.3*	5.3*					2.9*	2.9*	5.9
	2 set stabs down			5.3*	5.3*					2.9*	2.9*	5.9
	Dozer and stabs down			5.3*	5.3*					2.9*	2.9*	5.9
6.0 m	Rear dozer up			5.4*	4.9	4.7*	3.1			2.5*	2.1	7.1
	Rear dozer down			5.4*	5.4*	4.7*	3.5			2.5*	2.4	7.1
	2 set stabs down			5.4*	5.4*	4.7*	4.1			2.5*	2.5*	7.1
	Dozer and stabs down			5.4*	5.4*	4.7*	4.7*			2.5*	2.5*	7.1
4.5 m	Rear dozer up			6.0*	4.8	4.9	3.1	3.3	1.9	2.4*	1.7	7.9
	Rear dozer down			6.0*	5.4	4.9*	3.5	3.8*	2.2	2.4*	1.9	7.9
	2 set stabs down			6.0*	6.0*	4.9*	4.0	3.8*	2.6	2.4*	2.3	7.9
	Dozer and stabs down			6.0*	6.0*	4.9*	4.9*	3.8*	3.5	2.4*	2.4*	7.9
3.0 m	Rear dozer up	10.5*	8.2	7.3*	4.6	4.8	3.0	3.3	1.9	2.4*	1.5	8.3
	Rear dozer down	10.5*	9.5	7.3*	5..2*	5.6*	3.4	4.7*	2.2	2.4*	1.7	8.3
	2 set stabs down	10.5*	10.5*	7.3*	6.1	5.6*	4.0	4.7*	2.6	2.4*	2.1	8.3
	Dozer and stabs down	10.5*	10.5*	7.3*	7.3*	5.6*	5.1*	4.7*	3.5	2.4*	2.4*	8.3
1.5 m	Rear dozer up	12.0*	8.0*	7.2	4.5	4.8*	3.0	3..2	1.8	2.5*	1.4	8.3
	Rear dozer down	12.0*	9.2	8.9*	5.1	6.3*	3.4	5.1	2.1	2.5*	1.6	8.3
	2 set stabs down	12.0*	11.2	8.9*	6.0	6.3*	4.0	5.1*	2.5	2.5*	2.0	8.3
	Dozer and stabs down	12.0*	12.0*	8.9*	7.7	6.3*	5.0	5.1*	3.4	2.5*	2.5*	8.3
0.0 m	Rear dozer up	14.1*	7.9	7.2	4.4	4.7	2.8	3.1	1.7	2.6	1.4	8.1
	Rear dozer down	14.1*	9.3	9.7*	5.0	6.9*	3.2	5.0	2.0	2.8*	1.7	8.1
	2 set stabs down	14.1*	11.2	9.7*	6.0	6.9*	3.8	5.2	2.4	2.8*	2.0	8.1
	Dozer and stabs down	14.1*	14.1*	9.7*	7.7*	6.*	5.0	5.3*	3.3	2.8*	2.8*	8.1
-1.5 m	Rear dozer up	14.5*	7.4	7.3	4.1	4.4	2.5	3.0	1.6	2.9	1.5	7.6
	Rear dozer down	16.2*	8.8	9.9*	4.7	7.0*	2.9	4.4*	1.9	3.3*	1.8	7.6
	2 set stabs down	16.2*	11.1	9.9*	5.7	7.0*	3.5	4.4*	2.3	3.3*	22	7.6
	Dozer and stabs down	16.2*	15.7*	9.9*	7.8	7.0*	4.7	4.4.*	3..2	3.3*	3.1	7.6
-3.0 m	Rear dozer up	14.5	7.3	6.9	3.8	4.2	2.3			3.5	1.9	6.7
	Rear dozer down	16.8*	8.6	10.2*	4.4	6.4*	2.7			4.3*	2.3	6.7
	2 set stabs down	16.8*	10.9	10.2*	5.4	6.4*	3.3			4.3*	2.8	6.7
	Dozer and stabs down	16.8*	16.2	10.2*	7.5	6.4*	4.5			4.3*	2.8	6.7
-4.5 m	Rear dozer up	12.9*	7.0									
	Rear dozer down	12.9*	8.3									
	2 set stabs down	12.9*	10.6									
	Dozer and stabs down	12.9*	12.9*									

* Hydraulically limited

WX185

LIFTING CAPACITY
ARTICULATED BOOM

Values are expressed in tons

2.80 m dipper, counterweight 4.65 t, weight of Quick Coupler 295 kg (PL configurations: counterweight 5.15 t)

Front / 90°		REACH										
		3.0 m		4.5 m		6.0 m		7.5 m		At max reach		m
9.0 m	Rear dozer up			3.2*	3.2*					3.1*	3.1*	4.5
	Rear dozer down			3.2*	3.2*					3.1*	3.1*	4.5
	2 set stabs down			3.2*	3.2*					3.1*	3.1*	4.5
	Dozer and stabs down			3.2*	3.2*					3.1*	3.1*	4.5
7.5 m	Rear dozer up					3.7*	3.0			2.3*	2.3*	6.5
	Rear dozer down					3.7*	3.4			2.3*	2.3*	6.5
	2 set stabs down					3.7*	3.7*			2.3*	2.3*	6.5
	Dozer and stabs down					3.7*	3.7*			2.3*	2.3*	6.5
6.0 m	Rear dozer up					4.4*	3.1	2.5*	1.9	2.0*	1.8	7.6
	Rear dozer down					4.4*	3.5	2.5*	2.2	2.0*	2.0*	7.6
	2 set stabs down					4.4*	4.1	2.5*	2.5*	2.0*	2.0*	7.6
	Dozer and stabs down					4.4*	4.4*	2.5*	2.5*	2.0*	2.0*	7.6
4.5 m	Rear dozer up			5.3*	4.8	4.6*	3.1	3.4	2.0	1.9*	1.5	8.3
	Rear dozer down			5.3*	5.3*	4.6*	3.5	3.9*	2.3	1.9*	1.8	8.3
	2 set stabs down			5.3*	5.3*	4.6*	4.0	3.9*	2.7	1.9*	1.9*	8.3
	Dozer and stabs down			5.3*	5.3*	4.6*	4.6*	3.9*	3.6*	1.9*	1.9*	8.3
3.0 m	Rear dozer up	10.4*	8.3	6.8*	4.6	4.8	3.0	3.3	2.0	1.9*	1.3	8.6
	Rear dozer down	10.4*	9.6	6.8*	5.2*	5.3*	3.4	4.5*	2.2	1.9*	1.6	8.6
	2 set stabs down	10.4*	10.4*	6.8*	6.0	5.3*	3.9	4.5*	2.7	1.9*	1.9*	8.6
	Dozer and stabs down	10.4*	10.4*	6.8*	6.8*	5.3*	5.31	4.5*	3.5	1.9*	1.9*	8.6
1.5 m	Rear dozer up	11.7*	7.9	7.2	4.4	4.7	3.0	3.3	1.9	2.0*	1.2	8.7
	Rear dozer down	11.7*	9.2	8.4*	5.0	5.9*	3.4	4.8*	2.2	2.0*	1.5	8.7
	2 set stabs down	11.7*	11.0	8.4*	5.9	5.9*	3.9	4.8*	2.6	2.0*	1.8	8.7
	Dozer and stabs down	11.7*	11.7*	8.4*	7.6	5.9*	5.0*	4.8*	3.5	2.0*	2.0*	8.7
0.0 m	Rear dozer up	13.5*	7.9	7.1	4.4	4.7	2.8	3.1	1.7	2.3*	1.2	8.5
	Rear dozer down	13.5*	9.2	9.6*	5.0	6.6*	3..2	5.0	2.0	2.3*	1.5	8.5
	2 set stabs down	13.5*	11.1*	9.6*	5.9	6.6*	3.9	5.2	2.5	2.3*	1.8	8.5
	Dozer and stabs down	13.5*	13.5*	9.6*	7.6*	6.6*	5.0	5.2*	3.3	2.3*	2.3*	8.5
-1.5 m	Rear dozer up	14.3	7.4	7.3	4.1	4.5	2.6	3.0	1.6	2.6	1.4	8.0
	Rear dozer down	15.7*	8.8	9.7*	4.7	6.9*	3.0	4.8	1.9	2.6*	1.6	8.0
	2 set stabs down	15.7*	11.1	9.7*	5.7	6.9*	3.6	5.0	2.3	2.6*	2.0	8.0
	Dozer and stabs down	15.7*	15.5	9.7*	7.8*	6.9*	4.8	5.1*	3.2	2.6*	2.6*	8.0
-3.0 m	Rear dozer up	14.4	7.2	7.0	3.8	4.2	2.3			3.1	1.7	7.2
	Rear dozer down	16.5*	8.5	10.1*	4.5	6.9*	2.7			3.4*	2.0	7.2
	2 set stabs down	16.5*	10.8	10.1*	5.5	6.9*	3.3			3.4*	2.4	7.2
	Dozer and stabs down	16.5*	16.2	10.1*	7.6	6.9*	4.6			3.4*	3.4	7.2
-4.5 m	Rear dozer up	14.1	7.0	6.7	3.6							
	Rear dozer down	15.3*	8.3	8.0*	4.2							
	2 set stabs down	15.3*	10.6	8.0*	5.2							
	Dozer and stabs down	15.3*	15.3*	8.0*	7.2							

* Hydraulically limited

WX185 Series 2

STANDARD EQUIPMENT & OPTIONS

STANDARD EQUIPMENT

Hydraulic system
- Pump management system
- Electrohydraulic servo control
- Triple-pump-hydraulic system with two service pumps and seperate swing pump
- Engine and pump monitoring by power limit control
- 8 selectable power stages
- Automatic power increase in DRIVE stage
- Comfortable inching control
- Powerboost system

Electric system
- Automatic battery main switch (coupled to ignition key)
- Electronic immobiliser

Engine
- Latest generation CASE Family III Tier III diesel Engine comply with current compliant with European emissions standards
- Direct injection with turbo charger and charge air cooling
- Water-cooled, low-consumption and low-exhaust compliant to EU directive
- Electric diesel filling system
- Upper- and undercarriage
- Robust, shieled arc-welded, modular chassis in box section design
- Patenteddisc brakes for jolt-free work
- Power Shift gear box
- Large Toolbox under the step
- Encased ball bearing slew ring with long-life lubrication
- Swing drive with low-wearing disc brake
- Independent control of blade and each stabiliser
- Automatic axle locking system
- Automatic working brake
- Travel and swing hydrostatic braking
- Centralised control of blade and stabilisers on left joystick
- Additional working lights

Driver cab
- Noise-insulated and flexibly mounted cabin in soft design
- Tinted safety glazing all around, full up and over windscreen
- Sun blinds, large roof window, transparent rain protection
- LCD with integrated error diagnosis function
- Steering column incline infinitely variable
- Ergonomic design of arm rests and foot pedals
- Driver air suspension seat individually adjustable for height and incline
- Consoles adjustable for height and length
- 12V electrical auxiliray supply in cab
- Forword/Reverse shifting on joystick
- Cab headlights

OPTIONS

Hydraulic system
- Hydraulicsystem for hammer, grab, shears
- Safety valves for hoist mode

Upper- and undercarriage
- 30 km/h forword speed
- Single or twin tyres
- Dozer blade with parallel guidance
- Stabilisers with large, lockable pads for secure grip on uneven ground
- Transport holder for clamshell grab
- Intermediate bearing for prop shaft
- Central greasing nipple on boom
- Object handling kit with load hook

Driver cab
- Air conditioning
- Cooling box
- Radio
- FOPS guard for cab roof + front
- FOPS guard for cab roof
- Two cablights rear

Standard and optional equipment shown can vary by country.

Form No. 26061078GB - Printed in Italy - LEADER Firenze - 10/08

Worldwide Case Construction Equipment Contact Information

EUROPE/AFRICA/MIDDLE EAST:
Centre D'affaires EGB
5, Avenue Georges Bataille - BP 40401
60671 Le Plessis-Belleville - FRANCE

NORTH AMERICA/MEXICO:
700 State Street
Racine, WI 53404 U.S.A.

LATIN AMERICA:
Av. General David Sarnoff 2237
32210 - 900 Contagem - MG
Belo Horizonte BRAZIL

ASIA PACIFIC:
Unit 1 - 1 Foundation Place - Prospect
New South Wales - 2148 AUSTRALIA

CHINA:
No. 29, Industrial Premises, No. 376.
De Bao Road, Waigaoqiao Ftz, Pudong,
SHANGHAI, 200131, P.R.C.

CASE Customer Assistance
00800-2273-7373

The call is free from a land line. Check in advance with your Mobile Operator if you will be charged.

NOTE: Standard and optional fittings can vary according to the demands and specific regulations of each country. The illustrations may include optional rather than standard fittings - consult your Case dealer. Furthermore, CNH reserves the right to modify machine specifications without incurring any obligation relating to such changes.

CE

Conforms to directive 98/37/CE

CASE Construction Equipment
CNH UK Ltd
Unit 4,
Hayfield Lane Business Park,
Field Lane, Auckley,
Doncaster,
DN9 3FL
Tel. 00800-2273-7373
Fax +44 1302 802829

www.casece.com

CASE CONSTRUCTION