B-SERIES MINI EXCAVATORS
CX15B I CX18B

CASE
CONSTRUCTION

EFFICIENT.
POWERFUL. MINI.

www.casece.com
EXPERTS FOR THE REAL WORLD
SINCE 1842

B-SERIES
MINI EXCAVATORS

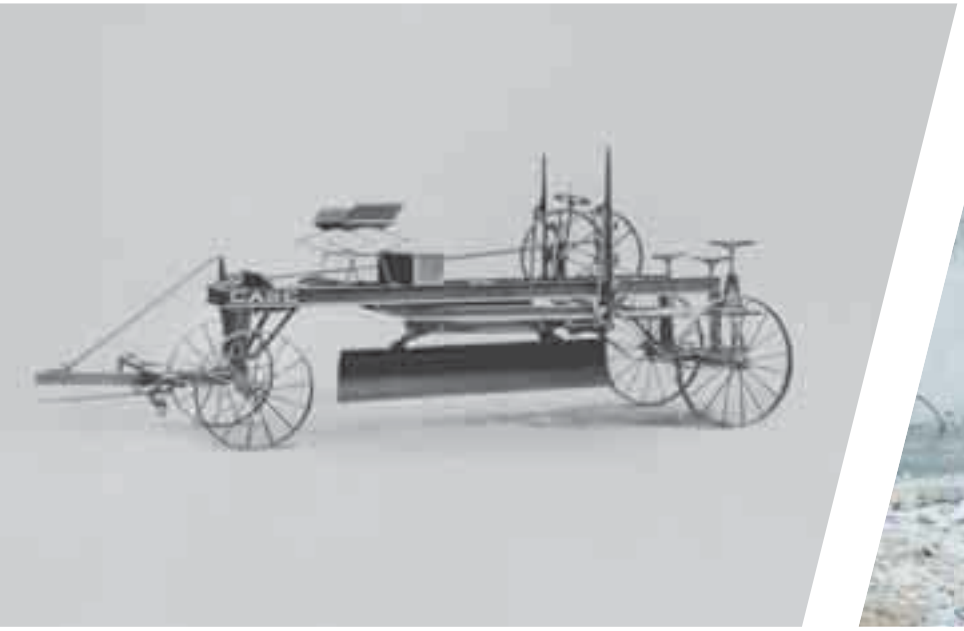

EXPERTS FOR THE REAL WORLD
SINCE 1842

1842 ***Jerome Increase founded.Racine Threshing Machine Works in Racine, Wisconsin, USA.***

1912 ***Case manufactures road building equipment.***

1969 ***Case begins skid steer loader production.***

1988 ***Case recognized by Fortune magazine: listed by Fortune magazine among the "100 Products America Makes Best."***

1995 ***Case expands attachment offering: co-branding and supply agreements with several key attachment suppliers.***

HERITAGE
A TRADITION OF INDUSTRY FIRSTS

1997 ***Start of Case mini assembly in Manchester.***

2005 ***Increased production capacity in larger CNH plant (Imola).***

2008 ***Renewal of models below 2ton (both conventional and SR).***

2011 ***Case leads Tier 4 solutions. Long Enters Hall of Fame: Case engineer, "father of the loader/backhoe", is inducted into the Construction Equipment Hall of Fame.***

2015 ***Case extends its European product line-up with the new grader range.***

B-SERIES
MINI EXCAVATORS

PRECISION AND CONTROLLABILITY
with the responsive hydraulic system

- CX15B features two highly efficient variable displacement piston pumps that deliver power on demand, reducing fuel consumption and increasing performance.
- CX18B has an additional gear pump for the swing and rotation circuits. When these functions are not used, the flow is automatically re-routed to boost digging.
- Both models excel in smoothness and precision at work.

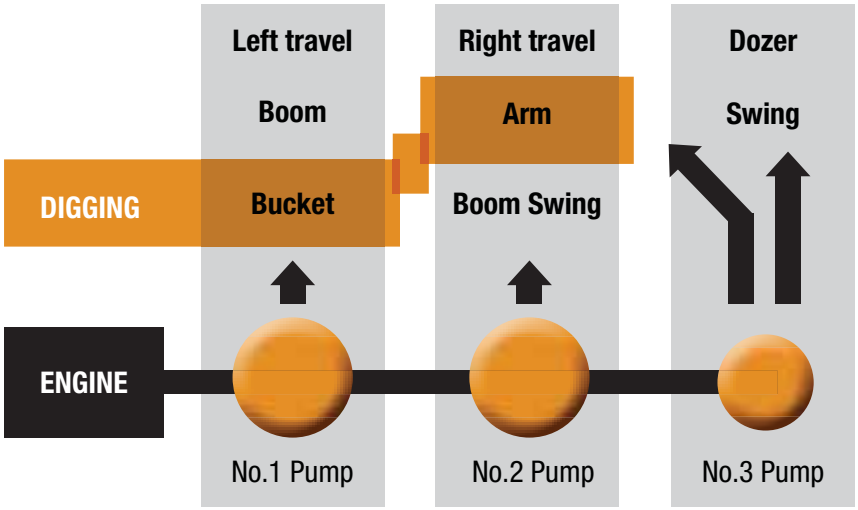

HIGH RELIABILITY
Superior strength

- The X-frame undercarriage provides superior strength and excellent stability.
- The cast iron boom foot is designed to withstand hard working conditions and deliver consistently excellent boom performance over time.
- The boom lift cylinder is well protected.

X-Frame design

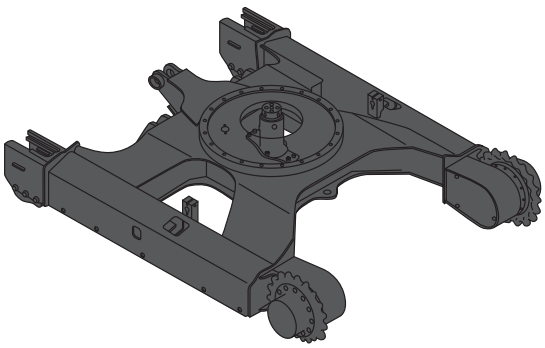

POWER ON DEMAND
TO WORK IN ALL CONDITIONS

EXCELLENT WORKING RANGE

with customizable long and short arms

- Ample boom swing angles (left 80°, right 45°) make side ditch digging easy and safe.
- Long and short dippersticks available:
  - Dig deeper and farther with the long arm.
  - Maximise digging force and machine sability with the short arm.

VARIABLE TRACK GAUGE

to access narrowest spaces

The tracks on the CX18B are easy to retract, enabling access through very narrow passages, and then extend again to increase stability allowing to work in comfort and safety.

Retracted tracks to access confined spaces

Extended tracks to increase stability while working

B-SERIES
MINI EXCAVATORS

OUTSTANDING STABILITY
with the centered boom design

The center swing boom design ensures maximum machine balance while assuring outstanding robustness and reliability.

HIGH VISIBILITY
Cab design focused on operators line of sight

- The 3-pillar design of canopy versions maximises cab accessibility and all round visibility.
- On cab versions the huge glazed area provides superior visibility to front, side and rear.

POWER ON DEMAND
TO WORK SAFELY

SAFE AND EASY MAINTENANCE

Grouped service points under the hood

The fully removable side panels together with the resistant «telene» rear hood provide easy and quick access to battery, hydraulic valves and all regular service components.

MAIN REASONS
TO CHOOSE THE B-SERIES

PRECISION AND CONTROLLABILITY
- Integrated flow pump system
- Ergonomic and smooth pilot controls

EXCELLENT WORKING RANGE
- Long and short dipper sticks available
- Ample boom swing angles

HIGH VERSATILITY
- Standard auxiliary hydraulics
- Mono or bi-directional hydraulic oil flow
- 300 to 500 mm buckets
- Easy to transport

ROLL-AWAY BLADE
- Unique «roll-away» blade
- Blade foldable without wrenches

OUTSTANDING STABILITY
- Center swing boom for better machine balance

HIGH VISIBILITY

- 3-post canopy design
- Fully glazed cab option

COMFORTABLE AND SAFE CAB

- Unique tilt-adjustable arm rests
- Suspension seat option

SAFE AND EASY MAINTENANCE

- Fully removable side panels
- Easy access to battery, hydraulic valves and all regular service components

HIGH RELIABILITY

- X-frame undercarriage
- Lift cylinder protection
- Cast iron boom foot

VARIABLE TRACK GAUGE

- Hydraulically retractable tracks (on CX18B)

B-SERIES
MINI EXCAVATORS

HIGH VERSATILITY

Wide range of attachments

- Standard auxiliary hydraulics to feed hammers, augers or other hydraulic attachments.
- Single and dual directional auxiliary hydraulics can be supplied with quick connect fittings on the dipper arm.
- 300 to 500 mm buckets available from factory
- Easy to transport: CASE minis feature lifting points and tie-down rings to facilitate transportation.

ROLL-AWAY BLADE

Efficient back-filling

Unique «roll-away» blade for quick and efficient trench back-filling.

Convenient blade folding

On CX18B when the tracks are extended the blade is folded out; when they are retracted tracks, the blade can easily be folded in without the need of any wrenches.

COMFORTABLE AND SAFE CAB

Spacious cab with suspended seat

- CASE minis feature unique tilt-adjustable arm rests that increase operator comfort while reducing operator fatigue.
- The suspension seat option is available on both models.

POWER ON DEMAND
TO WORK CONVENIENTLY

B-SERIES
MINI EXCAVATORS

CASE

B-SERIES
MINI EXCAVATORS

CX15B/CX18B SPECIFICATIONS

CAB PROTECTION

FOPS (Falling Objects Protection Structure) _____ standard
TOPS (Tipping Over Protection Structure)_____ standard

ENGINE

Displacement _____ 952 cm^3
Power _____ 15 hp
Max torque _____ 53.5 Nm
Emissions level _____ Not regulated in EU

HYDRAULIC SYSTEM

Variable displacement pumps type _____ axial piston
Flow delivery _____ 2 x 15.5 l/min
Gear pump delivery _____ - / 10.9 l/min
Maximum operating pressure _____ 206 / 216 bar
1st Auxiliary Flow _____ 31 / 26.4 l/min
1st Auxiliary Pressure _____ 206 bar

SLEWING & TRAVEL SPEED

Slewing speed _____ 9.5 / 9.0 rpm
Boom slewing angle (left/right) _____ 80°/ 45°
Travel Speed - Low (1st) _____ 2.0 km/h
Travel Speed - High (2nd)_____ 3.5 km/h

OPERATING WEIGHT

(includes operator, full fuel tank and one bucket)

		CX15B	CX18B
Dipper	Type	Standard	Standard
Cab	tonnes	1.70	1.78
Canopy	tonnes	1.58	1.66

TRANSPORT FEATURE

(weight is with full fuel tank, without operator, without bucket)

			CX15B	CX18B
			Standard	Standard
	Weight (Cab)	ton	1.59	1.67
	Weight (Canopy)	ton	1.47	1.55
B	Max width	mm	990	990 - 1.330
L	Max length	mm	3.605	3.605
H	Max height	mm	2.350	2.350

LIFTING CAPACITY

Front and Side Lifting Capacity at 1.5 meters from swing center

Lifting capacity in tonnes		CX15B Cab 1.5 m	CX15B Canopy 1.5 m	CX18B Cab 1.5 m	CX18B Canopy 1.5 m
DEPTH LEVEL					
Ground level	1,020 mm	523	453	560	491
	1,220 mm	515	445	553	483
2 m below ground	1,020 mm	374	374	399	399
	1,220 mm	492	450	524	488

Values refer to a machine outfit including 0.044 m^3 bucket

SPECIFICATIONS

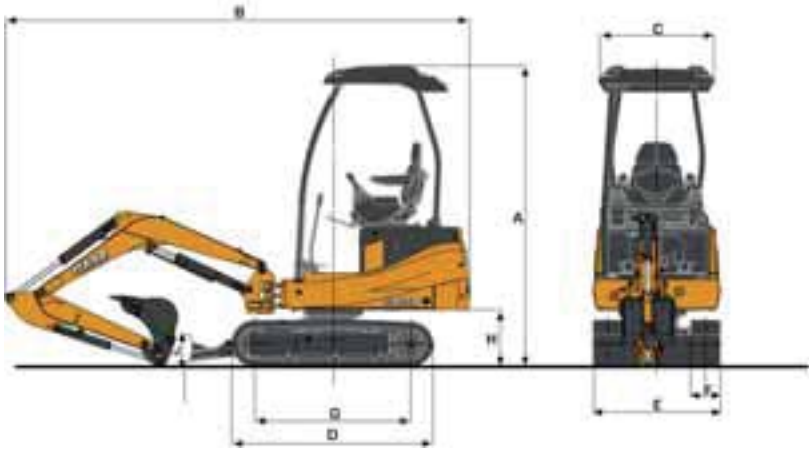

GENERAL DIMENSIONS

			CX15B	CX18B
			Standard	Standard
	Rear end swing radius	mm	1.065	1.065
I	Track width	mm	230	230
J	Undercarriage length	mm	2.210	2.210
K	Track length on ground	mm	1.565	1.565
M	Center distance of tumblers	mm	1.215	1.215
N	Blade radius on ground	mm	1.155	1.155
X	Blade max lifting	mm	210	210
Y	Blade max lowering	mm	310	310
B	Blade width	mm	990	990 - 1.330
E	Blade height	mm	245	245

DIGGING PERFORMANCES

			CX15B	CX18B
			Standard	Standard
	Dipperstick	mm	1.020 / 1.220	1.020 / 1.220
	Bucket thickness	mm	450	450
	Dipperstick Breakout force	kN	8.4	8.7
	Bucket Breakout force	kN	13.3	14.0
G	Max digging depth	mm	2.200 2.400	2.200 2.400
A	Min front slew radius (Cab/Canopy)	mm	1.530 1.560	1.530 1.560
C	Max reach	mm	3.800 3.990	3.800 3.990
D	Max dump height (Cab/Canopy)	mm	2.470 2.600	2.470 2.600
F	Max digging height (Cab/Canopy)	mm	3.550 3.675	3.550 3.675

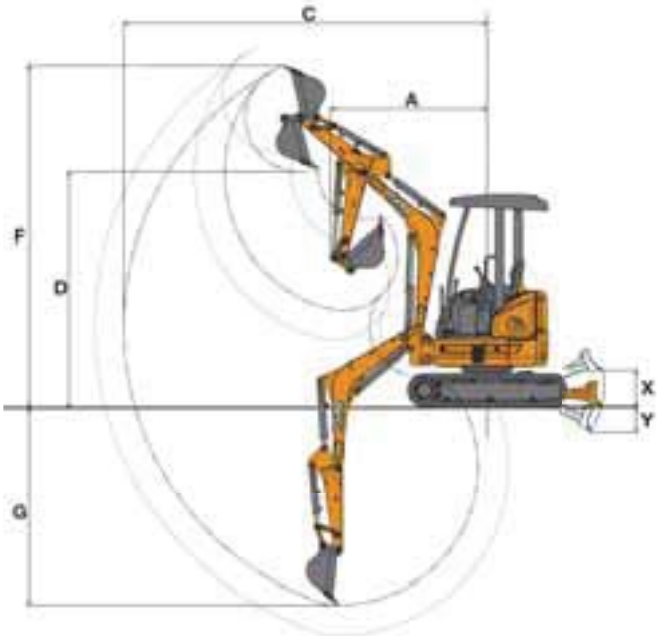

www.casece.com

EXPERTS FOR THE REAL WORLD

SINCE 1842

CASE CONSTRUCTION

Form No. AME5302CCGB - Printed in Italy - MediaCross Firenze - 05/15

CASE CONSTRUCTION EQUIPMENT
CONTACT INFORMATION

CNH INDUSTRIAL - TORINO
Via Plava 80
10135 Torino
Italy

CNH INDUSTRIAL - LUGANO
Riva Paradiso 14
6902 Paradiso - Lugano
Switzerland

CNH INDUSTRIAL - MIDDLE EAST
DAFZA – Dubai Airport Free Zone
West Wing 4 B, Office 642
P.O. Box 54588, Dubai,
United Arab Emirates

CNH INDUSTRIAL - SOUTH AFRICA
Waterfall Business Park
Bekker Street, Howick Close
1685 Midrand - Johannesburg
Republic of South Africa