CASE CONSTRUCTION

## G SERIES EVOLUTION - STAGE V

# WHEEL LOADERS


521G | 621G | 721G | 821G | 921G | 1021G | 1121G

# ACROSS HISTORY

**1842**
CASE is founded.

**1869**
The first CASE portable steam engine - road construction is born!

**1958**
The first CASE 4-WD wheel loader, the W9, is introduced.

**1969**
CASE begins skid steer loader production.

**1998**
CASE Wheel Loaders run FPT engines, leaders in industrial engine technology.

**2001**
The exclusive mid-mounted Cooling Cube in CASE wheel loaders means clean engine, reliability and massive bucket payloads.

**2011**
CASE is the first in the industry to launch a 5-speed lock up transmission.

**2012**
CASE completes its EU Stage IIIB wheel loader range: a further step forward in emissions reduction and once again the first in the industry.

**2015**
CASE wheel loaders achieve EU Stage IV emissions standards while further increasing fuel efficiency without a DPF.

**2017**
New G series wheel loaders are launched, winning the prestigious Good Design® Award.

**2020**
CASE begins introducing Stage V models in Europe, still without traditional DPF.

**2021**
The G series “EVOLUTION” wheel loaders are launched, featuring new connected services, thanks to the CASE SiteConnect module, to enhance the machine’s Productivity, Reliability and Profitability.

# YOUR BUSINESS PARTNER
# CONTINUES TO IMPROVE

**CASE G-SERIES EVOLUTION WHEEL LOADERS**

Since their launch in 2017 the CASE G-Series wheel loaders have been very popular for the excellent performance in terms of **productivity**, **comfort**, fuel consumption and **low operating costs**.

Exclusive engine technology provided by our sister company FPT Industrial, makes these wheel loaders a highly efficient product, able to overcome the most difficult operating conditions.

All CASE G-Series wheel loaders are equipped with best-in-class engine, transmission, axles, differentials and hydraulic components.

The cab provides the operator with outstanding comfort and visibility.

These wheel loaders are champions of productivity thanks to the optimal weight distribution resulting in a tipping load at the top of each machine's range, for the maximum productivity.

The cooling system's innovative "cube" design ensures the best cooling efficiency if compared to the overlapping radiators in conventional design: all the coolers are simultaneously crossed by the same air flow at the same temperature for increased reliability, preventing overheating failures on engine, transmission and hydraulics.

All these advantages make our wheel loaders favorites on jobsites around the world.

Now it's time to enhance your experience even more with the NEW FEATURES of the G-SERIES EVOLUTION WHEEL LOADERS!

# MAIN REASON TO CHOOSE
## THE G-SERIES EVOLUTION

### BEST-IN-CLASS VISIBILITY

One-piece design windshield, high-efficiency lighting, convex rear mirrors and rear view camera provide optimum visibility 24 hours a day

### COST SAVING

Heavy-duty axles with 100% differential lock is a cost-effective solution, affordable and reliable

### HIGH RELIABILITY

Unique cooling package
Best-in-class cooling system with cubic layout
Optimized engine air filtration


### FAST CYCLES

Best-in-class breakout force
Simultaneous lift and tilt at constant lift speed
Faster bucket lifting allows for faster truck loading

### PARALLEL LIFT FUNCTION

Use the electro-hydraulic system to emulate a parallel lift on a Z-Bar linkage

## ALL AROUND THE OPERATOR

360° total control through the touch screen display


## OPERATOR PROTECTION

Viscous cab suspension
Pressurized cab with high efficiency filtration
Low noise (69 dB) and vibration

## SUPERIOR COMFORT

Seat mounted console
Premium control interface with 8'' display
Hands-free calling kit
Multiple storage areas

## HIGH EFFICIENCY AND LOW EMISSIONS

With Hi-eSCR2 you have plenty of power with excellent fuel efficiency

## EXTENDED SERVICE INTERVALS AND EASY MAINTENANCE

Grouped drains rationalise maintenance operations


CASE
CASE


CASE
921G

# G-SERIES EVOLUTION
# WHEEL LOADERS


## HIGH EFFICIENCY

**With no EGR**

The engine was developed and manufactured by our award winning sister company FPT Industrial, which produces over 500000 engines per year and powers world record winners. The in-house design leverages advanced technologies developed for commercial vehicles and agriculture, and introduces specific tailored solutions for off-road applications. The CURSOR 9, with 6 in-line cylinders and a 8.7 L displacement, is designed to offer both fuel efficiency and reliability with plenty of power available (1021G-1121G).

- The air intake flow is increased by a turbocharger with air-to-air cooling.
- The multiple injection delivers best-in-class high torque performance at low rpms.
- No EGR valve is used: 100% fresh air is taken for combustion and no extra cooling system is needed.

# ENGINE
## KEEP IT SIMPLE



### LOW EMISSIONS

**Maintenance-free, built-for-life**

To maintain the advantages of the unique and unbeaten HI-eSCR technology, FPT Industrial meets Stage V emissions standards integrating a maintenance-free device on its SCR catalyst, thus allowing to comply with tightened limits on PM emissions within a compact package. This allows for a very compact engine compartment, resulting in excellent rear visibility. In addition, the maximum temperature reached during normal operating conditions by HI-eSCR 2 is still on average 200° C below a traditional particulate filter.
FPT's Stage V Solution:

- High Performance
- Low Operating Costs
- Ease of Use

In addition to traditional diesel, the Stage V CURSOR engines are capable of running also on B7 biodiesel, as well as HVO diesel (an even cleaner and more high-quality alternative to biodiesel, with superior performances in cold weathers).

# G-SERIES EVOLUTION
# WHEEL LOADERS

## HIGH RELIABILITY

**Heavy-duty axles**

The heavy-duty axles are tougher, bigger and easier to service thanks to the 3-piece housing design. Wet multiple disc brakes, made of resistant sintered bronze, are located in each wheel hub. Our heavy-duty axles are engineered to support L5 or solid tyres for very abrasive environments. Metal face seals positioned between axle and hub are resistant to water and fine debris at low temperatures. The heavy-duty axles on 1021G and 1121G are also available with optional oil cooling.

The heavy-duty axles deliver added value resulting from:

- 20-30% lower tyre wear because of no slippage between the wheels.
- reduced fuel consumption because there is no friction in the differential.
- reduced downtime for maintenance because of fewer moving components with open differentials.

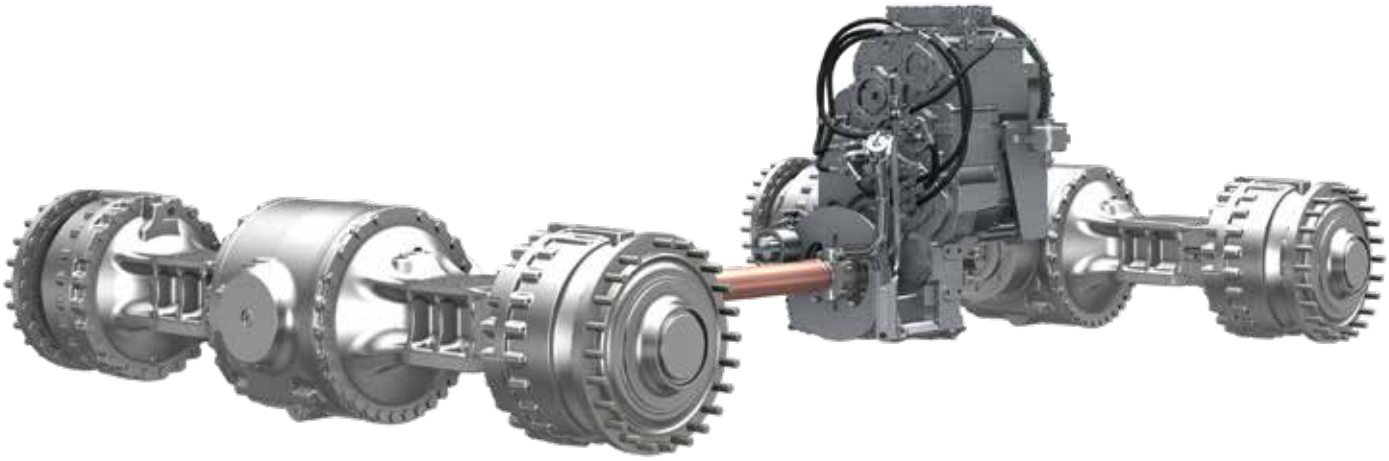

# MORE RELIABLE
# MORE PROFITABLE

**CASE cooling cube**

The unique design of the CASE cooling cube, with five radiators mounted to form a cube instead of overlapping, ensures a constant flow of fresh and clean air from the sides and from the top to maintain constant fluid temperatures.
The cube structure provides easy access to radiators for a more effective cleaning and improved serviceability: additional cleaning can also be easily done manually, with separate access to each radiator.

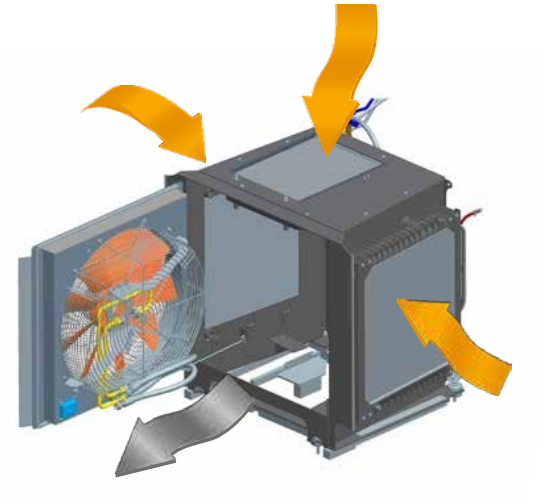


**Cooling cube details**

1- Variable speed reversible fan
2- Hydraulic oil cooler
3- Transmission oil cooler
4- Turbo air intercooler
5- A/C condensator
6- Diesel radiator
7- Engine radiator

**Air filter dust ejector**

1021G wheel loader is fitted with an air filter dust ejector: the low pressure in the exhaust is used as a vacuum cleaner to remove the dust stuck in the air intake filter.
This system is designed to improve your machine performance in terms of reliability, especially in dusty environments.


CASE
T21G

# MORE PRODUCTIVE, MORE PROFITABLE


## PARALLEL LIFT FUNCTION

The New G-Series Wheel Loaders provide a smart solution: just press a button on your keypad and a Z-Bar linkage will behave as an XT linkage, thanks to the electro-hydraulic controls governed by a software able to perform angle compensation during the lifting operation.

The fork shank or the bottom of the bucket will remain parallel to the ground from the lowest to the highest boom position with -3° / +7° angular tolerances.

***Standard on all units.***

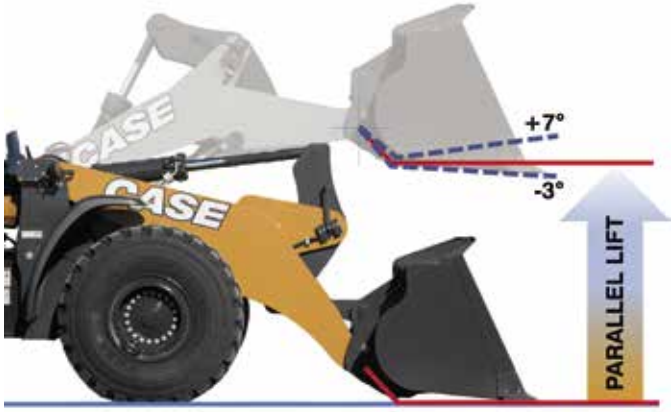


# G-SERIES EVOLUTION
# WHEEL LOADERS

## COST SAVINGS

**100% auto-lock differential**

With open differentials, no friction is applied to reduce wheel slip. As a result, there is less tyre wear and lower energy losses. With the 100% auto-lock, 100% of the available torque is transmitted to the wheels to provide maximum tractive effort.

| Loading on soft ground | | Taking a curve on solid ground | |
|---|---|---|---|
| With limited slip differential: | With 100% diff lock (optional): | With limited slip differential: | With 100% diff lock (optional): |
|  |  |  |  |
| • 70% tractive effort transmitted to the wheels<br>• Automatic engagement | • 100% tractive effort transmitted to the wheels<br>• Automatic or manual engagement | Automatic slip limited engagement<br>• Internal losses and wind up<br>• Increased tyre wear | No engagement (open diff)<br>• No energy loss<br>• Less tyre wear |

# LESS MAINTENANCE
# AND LOWER COSTS


## EXTENDED SERVICE INTERVALS AND EASY MAINTENANCE

***Save 20% on total maintenance costs!***

The regular maintenance becomes even easier than before and much more economically convenient, thanks to the extended service intervals implemented on the CASE G-Series Evolution Wheel Loaders.
Increased machine uptime thanks to reduced stops for servicing.

# G-SERIES EVOLUTION
# WHEEL LOADERS

## ALL AROUND THE OPERATOR

***All functions at your fingertip***

The new Touchscreen Display allows the operator to get the full control of all the machine functions and setting, with additional new features specifically designed to enhance the driver's experience.


**New features:**

- Digital Operator's Manual
- Electro-hydraulic controls adjustability settings
- New Power Modes
- Follow-me Home Lights improvements

**Easy and intuitive navigation.**

- Touchscreen 'Tap' and 'Scroll' functions, similar to automotive display technology
- New Configurable Buttons (Machine Settings)

***Standard on all units.***


Digital Operator's Manual

***Keep your production under full control***

The new G-Series Evolution wheel loaders offer today the new integrated payload scale, a powerful tool, based on CASE proprietary design, accessible in the new touchscreen monitor.
By the new integrated payload scale, you can read and log every single bucketload. You can also optimize every job report by identifying it with a complete set of data (the job ticket) like, customer name, your company name and address, the truck ID, the truck target load and every other data necessary to provide full information for every ticket you will close during the day.

The system is able to indicate if the last bucket is exceeding the target load previously set and, in this case, the **"tip-off" mode** can be activated, helping the operator to partially discharge the contents in the bucket until the target load is achieved, **expediting the loading operation with no wasting time** in re-adjusting the truck load before leaving the loading facility

- **More Productivity!**
- **More Profitability!**

***Standard for all models.***

# NEW DRIVING EXPERIENCE

***Immediately enter your favorite screens***

Three configurable buttons are located close to the loader control (both joystick and multi-levers version).

On each button you can easily configure your most frequently used screens and make them immediately appear on the display just pressing the associated button.

No more wasting time to find the right screen within plenty of menus.
Only one touch and what you want is already there!

***Standard on all units.***


Buttons are also replicated on the touchscreen display

# 521G - 921G
# MAIN SPECIFICATIONS

| ENGINE | | 521G | 621G | 721G | 821G | 921G |
|---|---|---|---|---|---|---|
| Maker & Model | | FPT N45 | FPT N67 | FPT N67 | FPT N67 | FPT N67 |
| No. of cylinders | | 4 | 6 | 6 | 6 | 6 |
| Displacement | l | 4.5 | 6.7 | 6.7 | 6.7 | 6.7 |
| Air intake | | Turbocharger with air-to-air cooling. No EGR valve is used: only fresh air is taken for combustion and no extra cooling system is needed. | | | | |
| Injection | | Common Rail Multiple Injection. | | | | |
| After Treatment System | | HI-eSCR 2 (DOC+SCRoF) | | | | |
| Emissions Level | | Compliant with EU Stage V | | | | |
| Maximum power | kW | 106 | 128 | 145 | 172 | 190 |
| Imperial | hp | 142 | 172 | 195 | 230 | 255 |
| Metric | hp | 144 | 174 | 197 | 234 | 258 |
| @ Engine speed (ISO 14396) | rpm | 1800 | 1800 | 2000 | 1800 | 1600 |
| Maximum Torque | Nm | 612 | 730 | 950 | 1184 | 1300 |
| @ Engine speed (ISO 14396) | rpm | 1600 | 1600 | 1300 | 1300 | 1300 |
| **TRANSMISSION** | | | | | | |
| 4-speed ZF Powershift with Intelligent Clutch Cut Off (ICCO) | | | | | | |
| Forward 1 | km/h | 6 | 7 | 8 | 7 | 7 |
| Forward 2 | km/h | 11 | 13 | 13 | 12 | 12 |
| Forward 3 | km/h | 22 | 24 | 25 | 23 | 23 |
| Forward 4 | km/h | 36 | 39 | 37 | 37 | 36 |
| Reverse 1 | km/h | 6 | 7 | 8 | 7 | 7 |
| Reverse 2 | km/h | 12 | 14 | 13 | 13 | 13 |
| Reverse 3 | km/h | 23 | 25 | 26 | 25 | 25 |
| **AXLES** | | | | | | |
| Rear axle oscillation | ° | 24 | 24 | 24 | 24 | 24 |
| Heavy Duty ZF Axles | | with open differentials and automatic 100% lock system on the front differential. 100% tractive effort always, no wheel slip, less tire wear. | | | | |
| Standard ZF Axles | | with limited slip differentials front and rear 73% tractive effort on slippery ground. | | | | |
| **TIRES** | | | | | | |
| Standard tire's size | | 17.5R25 | 20.5R25 | 20.5R25 | 23.5R25 | 23.5R25 |

| BRAKES | | 521G | 621G | 721G | 821G | 921G |
|---|---|---|---|---|---|---|
| Service brake | ° | Maintenance free, self-adjusting wet 4-wheel disc brakes. | | | | |
| Service brake disc area | $m^2$/hub | 0.39 | 0.39 | 0.39 | 0.39 | 0.47 |
| Parking brake | | With the negative brake all four wheels are automatically stopped when the engine is stopped. | | | | |
| Parking brake disc area | $cm^2$ | 58 | 58 | 82 | 82 | 82 |
| **HYDRAULICS** | | | | | | |
| Loader control valve | | Bosch-Rexroth, closed center, load sensing/flow sharing. | | | | |
| Steering | | Steering cylinders actuated by hydraulic orbitrol under priority valve, controlled, in turn, by active load sensing signal. | | | | |
| Loader controls | | Pilot with proportional solenoid valves controlled by electro-hydraulic single joystick or single-axis 2/3 levers. | | | | |
| Pump type | | Single, variable displacement | | | Tandem. var. displ. | |
| Max oil flow | l/min | 134 | 169 | 206 | 236 | 278 |
| @ engine speed | rpm | 2000 | 2000 | 2000 | 2000 | 2000 |
| **AUXILIARY HYDRAULIC CIRCUIT** | | | | | | |
| Max oil flow | l/min | 134 | 169 | 206 | 236 | 278 |
| Max pressure | bar | 249-255 | 249-255 | 249-255 | 249-255 | 249-255 |
| **FLUIDS CAPACITIES** | | | | | | |
| Fuel tank | l | 189 | 246 | 246 | 288 | 288 |
| DEF (AdBlue®) tank | l | 44.2 | 58.9 | 58.9 | 58.9 | 58.9 |
| Engine coolant | l | 22 | 27 | 28 | 30 | 30 |
| Engine oil | l | 12 | 13 | 13 | 13 | 13 |
| Hydraulic oil tank | l | 57 | 91 | 91 | 91 | 91 |
| Total hydraulic system oil | l | 114 | 148 | 180 | 180 | 200 |
| Front and rear axles | l | 22+22 | 22+22 | 35+35 | 40+40 | 42+40 |
| Transmission oil | l | 19 | 27 | 34 | 34 | 34 |
| **CAB PROTECTION** | | | | | | |
| Protection against falling objects (FOPS) | | According to ISO EN 3449 std. | | | | |
| Protection against roll-over (ROPS) | | According to ISO EN 13510 std. | | | | |
| **NOISE AND VIBRATIONS** | | | | | | |
| Inside the cab – LpA (ISO 6396-2008) | dB | 68 | 68 | 68 | 68 | 69 |
| Outside – LwA (2000/14/EC) | dB | 102 | 104 | 103 | 104 | 104 |
| Vibrations | | Operator ‘s seat meets the criteria of ISO 7096:2000. The vibrations transmitted do not exceed 0.5 $m/s^2$ | | | | |
| **ELECTRICAL SYSTEM** | | | | | | |
| System voltage | V | 24 | 24 | 24 | 24 | 24 |
| Batteries | | 2 x 12 V | 2 x 12 V | 2 x 12 V | 2 x 12 V | 2 x 12 V |
| Alternator - capacity | A | 70 | 120 | 120 | 120 | 120 |

# 521G - 921G
# MAIN SPECIFICATIONS - Z-BAR

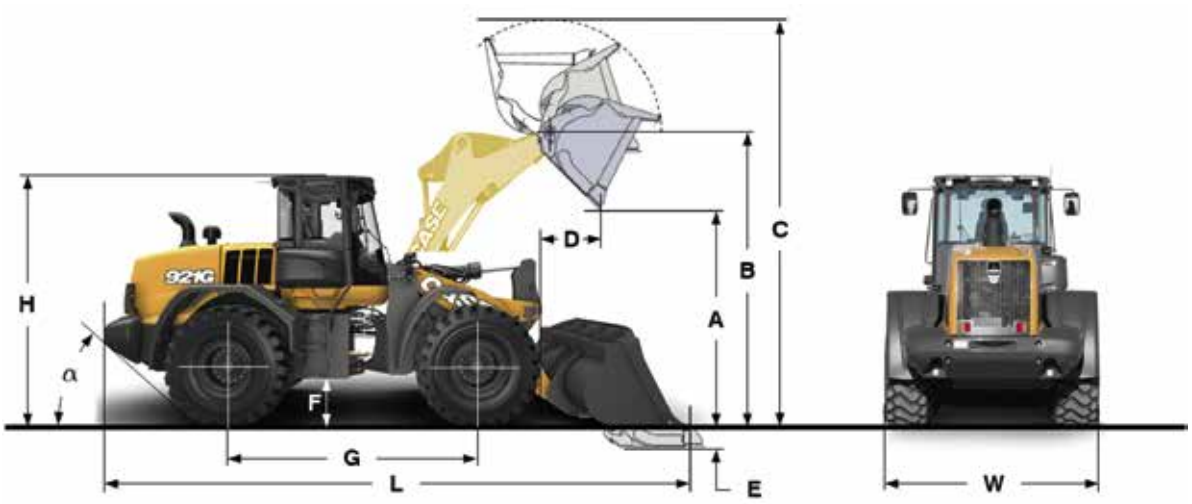


| GENERAL DIMENSION | | | 521G | | 621G | | 721G | | 821G | | 921G | |
|---|---|---|---|---|---|---|---|---|---|---|---|---|
| | Bucket mount (with bolt-on cutting edge) | | Direct | QC | Direct | QC | Direct | QC | Direct | Direct | Direct | Direct |
| | Std GP Bucket Rated Capacity | m³ | 2 | 1.7 | 2.3 | 1.9 | 2.7 | 2.7 | 3.4 | 3.2 | 4.0 | 3.6 |
| | Bucket Capacity at 110% Fill Factor | m³ | 2.2 | 1.9 | 2.5 | 2.1 | 3 | 3.0 | 3.8 | 3.5 | 4.4 | 4.0 |
| | Bucket overall width | mm | 2500 | 2440 | 2490 | 2490 | 2710 | 2690 | 2950 | 2950 | 2950 | 2950 |
| | Bucket weight | kg | 850 | 1055 | 925 | 1375 | 1220 | 1705 | 1570 | 1540 | 1770 | 1650 |
| A | Dump height at 45° @ full boom height | mm | 2610 | 2480 | 2750 | 2700 | 2920 | 2730 | 2940 | 2960 | 2870 | 2910 |
| B | Bucket hinge pin height | mm | 3610 | 3610 | 3830 | 3830 | 3979 | 3980 | 4120 | 4120 | 4120 | 4120 |
| C | Overall height | mm | 4740 | 4740 | 5040 | 5050 | 5320 | 5530 | 5490 | 5450 | 5730 | 5610 |
| D | Bucket reach at full boom height | mm | 1110 | 1070 | 1080 | 1100 | 1120 | 1170 | 1160 | 1140 | 1050 | 1200 |
| E | Digging depth | mm | 80 | 100 | 90 | 90 | 80 | 70 | 70 | 70 | 70 | 70 |
| F | Ground clearance | mm | 340 | 340 | 390 | 390 | 380 | 380 | 420 | 420 | 430 | 430 |
| G | Wheel base | mm | 2750 | 2750 | 2900 | 2900 | 3250 | 3250 | 3340 | 3340 | 3340 | 3340 |
| H | Cab roof height | mm | 3270 | 3270 | 3380 | 3380 | 3380 | 3380 | 3460 | 3460 | 3460 | 3460 |
| W | Overall vehicle width (without bucket) | mm | 2450 | 2450 | 2480 | 2480 | 2560 | 2560 | 2830 | 2830 | 2830 | 2830 |
| L | Overall length on ground (with bucket) | mm | 6840 | 6930 | 7470 | 7630 | 7650 | 7840 | 8080 | 8050 | 8140 | 8210 |
| | Overall length on ground (w/o bucket) | mm | 5770 | 5770 | 6280 | 6280 | 6530 | 6530 | 6780 | 6780 | 6780 | 6780 |
| a | Departure angle | | 30° | 30° | 25° | 25° | 29° | 29° | 29° | 29° | 29° | 29° |
| | Turning radius (at outer wheel) | mm | 5000 | 5000 | 5220 | 5220 | 5750 | 5750 | 6030 | 6030 | 6030 | 6030 |
| | Turning radius (at bucket corner) | mm | 5530 | 5530 | 5760 | 5750 | 6320 | 6410 | 6630 | 6620 | 6620 | 6640 |
| | Full steering angle | ° | ±40 | ±40 | ±40 | ±40 | ±40 | ±40 | ±40 | ±40 | ±40 | ±40 |
| | Bucket rollback @ boom carry position | ° | 44 | 50 | 45 | 50 | 44 | 38 | 45 | 45 | 45 | 45 |
| | Bucket dump @ maximum boom height | ° | 55 | 45 | 51 | 41 | 50 | 51 | 55 | 55 | 50 | 55 |
| LOADER PERFORMANCE | | | | | | | | | | | | |
| | Bucket mount (with bolt-on cutting edge) | | Direct | QC | Direct | QC | Direct | QC | Direct | Direct | Direct | Direct |
| | Machine operating weight (w/L3 tires) | kg | 11100 | 11300 | 12850 | 13300 | 14770 | 15290 | 18200 | 18170 | 20550 | 20430 |
| | Tipping load, straight (rigid tires) | kg | 8870 | 8530 | 10800 | 10270 | 12640 | 11040 | 14670 | 14700 | 17440 | 17490 |
| | Tipping load, full turn (rigid tires) | kg | 7790 | 7470 | 9400 | 8880 | 10990 | 9530 | 12780 | 12810 | 15020 | 15080 |
| | Tipping load, straight (deflected tires) | kg | 8229 | 7896 | 10030 | 9497 | 11741 | 10322 | 13620 | 13657 | 16246 | 16290 |
| | Tipping load, full turn (deflected tires) | kg | 7053 | 6741 | 8481 | 7965 | 9528 | 8298 | 10983 | 11026 | 12982 | 13025 |
| | Maximum material density (Rigid tires) | kg/m³ | 1976 | 2104 | 2037 | 2265 | 1883 | 1701 | 1759 | 1805 | 1782 | 1639 |
| | Maximum material density (deflected tires) | kg/m³ | 1807 | 1915 | 1854 | 2056 | 1713 | 1541 | 1607 | 1643 | 1635 | 1439 |
| | Bucket break-out force | daN | 7453 | 6884 | 9905 | 9267 | 14318 | 11896 | 14749 | 15142 | 17377 | 16632 |
| CYCLE TIMES | | | | | | | | | | | | |
| | Lift (full load) | sec | 5.4 | 5.4 | 6.3 | 6.3 | 5.2 | 5.2 | 6.2 | 6.2 | 6.3 | 6.3 |
| | Dump (full load) | sec | 1.2 | 1.2 | 1.2 | 1.2 | 1.2 | 1.2 | 1.2 | 1.2 | 1.5 | 1.5 |
| | Lowering (empty, power down) | sec | 3.9 | 3.9 | 4.4 | 4.4 | 2.5 | 2.5 | 2.9 | 2.9 | 3.6 | 3.6 |
| | Lowering (empty, float down) | sec | 3.9 | 3.9 | 4.8 | 4.8 | 2.4 | 2.4 | 2.5 | 2.5 | 3.1 | 3.1 |

**Notes:** Data given with the following operating condition: Full fluids capacities; Operator on board; Tires: Michelin XHA2 L3 (Standard width); General purpose bucket.
Data may be subject to changes without notices


CASE
721G

# 1021G - 1121G
# MAIN SPECIFICATIONS

| ENGINE | | 1021G | 1121G |
|---|---|---|---|
| Maker & Model | | FPT Cursor 9 | FPT Cursor 9 |
| No. of cylinders | | 6 | 6 |
| Displacement | l | 8.7 | 8.7 |
| Air intake | | Turbocharger with air-to-air cooling. No EGR valve is used: only fresh air is taken for combustion and no extra cooling system is needed. | |
| Injection | m | Common Rail Multiple Injection. | |
| After Treatment System | m | HI-eSCR 2 (DOC+SCRoF) | |
| Emissions Level | m | Compliant with EU Stage V | |
| Maximum power | kW | 237 | 257 |
| Imperial | hp | 318 | 345 |
| Metric | hp | 322 | 349 |
| @ Engine speed (ISO 14396) | rpm | 1800 | 1800 |
| Maximum Torque | Nm | 1479 | 1604 |
| @ Engine speed (ISO 14396) | rpm | 1100 | 1100 |
| **TRANSMISSION** | | | |
| 4-speed ZF Powershift with Auto-Shift system and Intelligent Clutch Cut Off (ICCO) | | | |
| Forward 1 | km/h | 7 | 7 |
| Forward 2 | km/h | 13 | 12 |
| Forward 3 | km/h | 19 | 18 |
| Forward 4 | km/h | 38 | 38 |
| Reverse 1 | km/h | 7 | 7 |
| Reverse 2 | km/h | 13 | 13 |
| Reverse 3 | km/h | 27 | 25 |
| **AXLES** | | | |
| Rear axle oscillation | ° | 24 | 24 |
| Heavy Duty ZF Axles | | with open differentials and automatic 100% lock system on the front differential. 100% tractive effort always, no wheel slip, less tire wear. | |
| **TIRES** | | | |
| Standard tire's size | | 26.5R25 | 26.5R25 |
| **BRAKES** | | | |
| Service brake | ° | Maintenance free, self-adjusting wet 4-wheel disc brakes. | |
| Service brake disc area | $m^2$/hub | 0.74 | 0.74 |
| Parking brake | | With the negative brake all four wheels are automatically stopped when the engine is stopped. | |
| Parking brake disc area | $cm^2$ | 82 | 82 |
| **HYDRAULICS** | | | |
| Loader control valve | | Bosch-Rexroth, closed center, load sensing/flow sharing. 3 spool main control valve. | |
| Steering | | Steering cylinders actuated by hydraulic orbitrol under priority valve, controlled, in turn, by active load sensing signal. | |
| Loader controls | | Pilot with proportional solenoid valves controlled by electro-hydraulic single joystick or single-axis 2/3 levers. | |
| Pump type | | Tandem, variable displacement. | |
| Max oil flow | l/min | 348 | 376 |
| @ engine speed | rpm | 2000 | 2000 |
| **AUXILIARY HYDRAULIC CIRCUIT** | | | |
| Max oil flow | l/min | 240 | 240 |
| Max pressure | bar | 249-255 | 249-255 |
| **FLUIDS CAPACITIES** | | | |
| Fuel tank | l | 459 | 459 |
| DEF (AdBlue®) tank | l | 90.8 | 90.8 |
| Engine coolant | l | 57 | 57 |
| Engine oil | l | 26 | 26 |
| Hydraulic oil tank | l | 134 | 134 |
| Total hydraulic system oil | l | 250 | 250 |
| Front and rear axles | l | 68+68 | 68+68 |
| Transmission oil | l | 45 | 45 |
| **NOISE AND VIBRATIONS** | | | |
| Inside the cab – LpA (ISO 6396-2008) | dB | 68 | 69 |
| Outside – LwA (2000/14/EC) | dB | 105 | 104 |
| Vibrations | | Operator 's seat meets the criteria of ISO 7096:2000. The vibrations transmitted do not exceed 0.5 $m/s^2$ | |

| CAB PROTECTION | |
|---|---|
| Protection against falling objects (FOPS) | According to ISO EN 3449 std. |
| Protection against roll-over (ROPS) | According to ISO EN 13510 std. |

| ELECTRICAL SYSTEM | | | |
|---|---|---|---|
| System voltage | V | 24 | 24 |
| Batteries | dB | 2 x 12 V | 2 x 12 V |
| Alternator - capacity | A | 120 | 120 |

# 1021G - 1121G
# MAIN SPECIFICATIONS

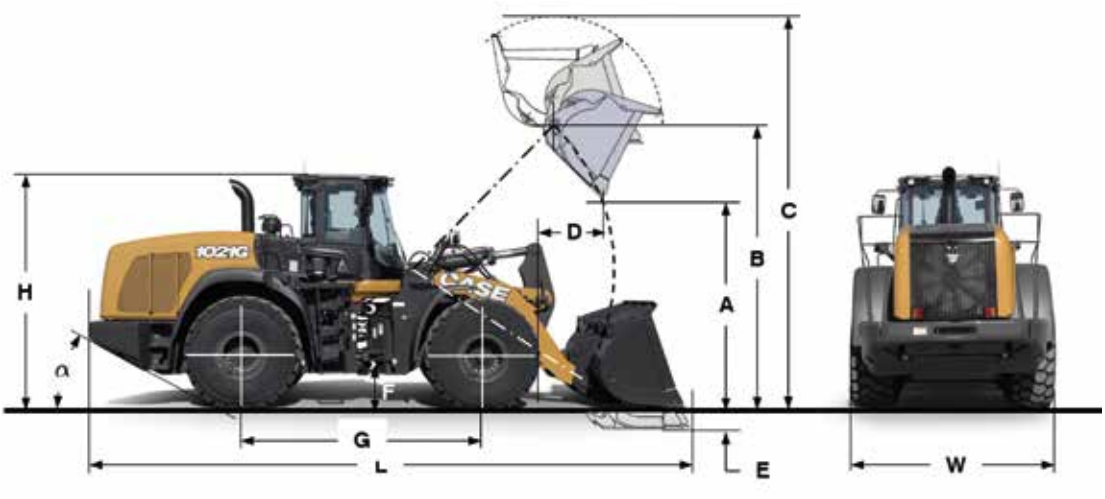


| GENERAL DIMENSION | | | 1021G | | 1121G | |
|---|---|---|---|---|---|---|
| | Bucket mount (with bolt-on cutting edge) | | Z-BAR Flat bottom | Z-BAR 5° bottom | Z-BAR Flat bottom | Z-BAR 5° bottom |
| | Std GP Bucket Rated Capacity | $m^3$ | 4.2 | 4.2 | 5.0 | 4.8 |
| | Bucket Capacity at 110% Fill Factor | $m^3$ | 4.6 | 4.6 | 5.5 | 5.3 |
| | Bucket overall width | mm | 3020 | 3170 | 3180 | 3170 |
| | Bucket weight | kg | 2320 | 2140 | 2450 | 2250 |
| A | Dump height at 45° @ full boom height | mm | 2940 | 3060 | 3120 | 3190 |
| B | Bucket hinge pin height | mm | 4250 | 4250 | 4450 | 4450 |
| C | Overall height | mm | 5960 | 5850 | 6230 | 6230 |
| D | Bucket reach at full boom height | mm | 1220 | 1290 | 1170 | 1290 |
| E | Digging depth | mm | 120 | 120 | 110 | 110 |
| F | Ground clearance | mm | 440 | 440 | 430 | 430 |
| G | Wheel base | mm | 3550 | 3550 | 3550 | 3550 |
| H | Cab roof height | mm | 3570 | 3570 | 3570 | 3570 |
| W | Overall vehicle width (without bucket) | mm | 2990 | 2990 | 2980 | 2980 |
| L | Overall length on ground (with bucket) | mm | 9030 | 8970 | 9190 | 9200 |
| | Overall length on ground (w/o bucket) | mm | 7550 | 7550 | 7700 | 7700 |
| a | Departure angle | | 32° | 32° | 32° | 32° |
| | Turning radius (at outer wheel) | mm | 6370 | 6370 | 3670 | 6370 |
| | Turning radius (at bucket corner) | mm | 7040 | 7090 | 7170 | 7170 |
| | Full steering angle | ° | ±40 | ±40 | ±40 | ±40 |
| | Bucket rollback @ boom carry position | ° | 49 | 49 | 49 | 49 |
| | Bucket dump @ maximum boom height | ° | 48 | 48 | 45 | 50 |
| LOADER PERFORMANCE | | | | | | |
| | Bucket mount (with bolt-on cutting edge) | | Z-BAR Flat bottom | Z-BAR 5° bottom | Z-BAR Flat bottom | Z-BAR 5° bottom |
| | Machine operating weight (w/L3 tires) | kg | 25760 | 25590 | 28170 | 27970 |
| | Tipping load. straight (rigid tires) | kg | 21890 | 22040 | 23580 | 23710 |
| | Tipping load. full turn (rigid tires) | kg | 19010 | 19160 | 20420 | 20570 |
| | Tipping load. straight (deflected tires) | kg | 20278 | 20443 | 21886 | 22028 |
| | Tipping load. full turn (deflected tires) | kg | 15993 | 16176 | 17244 | 17401 |
| | Maximum material density (Rigid tires) | $kg/m^3$ | 2237 | 1818 | 1889 | 1997 |
| | Maximum material density (deflected tires) | $kg/m^3$ | 2045 | 1718 | 1725 | 1825 |
| | Bucket break-out force | daN | 18701 | 19613 | 21898 | 21781 |
| | CYCLE TIMES | | | | | |
| | Lift (full load) | sec | 6.2 | 6.2 | 6.5 | 6.5 |
| | Dump (full load) | sec | 1.3 | 1.3 | 1.4 | 1.4 |
| | Lowering (empty. power down) | sec | 2.8 | 2.8 | 2.8 | 2.8 |
| | Lowering (empty. float down) | sec | 2.6 | 2.6 | 2.6 | 2.6 |

**Notes:** Data given with the following operating condition: Full fluids capacities; Operator on board; Tires: Michelin XHA2 L3 (Standard width); General purpose bucket.
Data may be subject to changes without notices

# BUILDING
# A STRONG CASE.

Since 1842, at CASE Construction Equipment we have lived by an unwavering commitment to build practical, intuitive solutions that deliver both efficiency and productivity.

We continually strive to make it easier for our customers to implement emerging technologies and new compliance mandates.

Today, our global scale combined with our local expertise enables us to keep customers' real-world challenges at the center of our product development.

The vast CASE dealers' network is always ready to support and protect your investment and exceed your expectations, while also providing you with the ultimate ownership experience.

Our goal is to build both stronger machines—and stronger communities. At the end of the day, we do what's right for our customers and our communities so that they can count on CASE.

**CaseCE.com**

NOTE: Standard and optional fittings can vary according to the demands and specific regulations of each country. The illustrations may include optional rather than standard fittings - consult your Case dealer. Furthermore, CNH Industrial reserves the right to modify machine specifications without incurring any obligation relating to such changes.

Conforms to directive 2006/42/EC

***creative-farm.it 12/22***