CX180C

CASE CONSTRUCTION

HYDRAULIC EXCAVATOR

ENGINE

Brand	ISUZU
Model	AI-4JJ1X
Type	4-stroke engine, water-cooled, 4 cylinder – common rail injection system, turbocharged with air-cooled intercooler, with tier 3 emission certification.
Rating power	
Net (SAE J1349, ISO 9249)	119.6 hp (89,2 kW) @ 2200 rpm
Gross (ISO 14396)	123.4 hp (92,0 kW) @ 2200 rpm
Piston displacement	183 in³ (2999 cm³)
Maximum torque	
Net (SAE J1349, ISO 9249)	303.88 lbf.ft (412 Nm) @ 1800 rpm
Gross (ISO 14396)	309.78 lbf.ft (420 Nm) @ 1800 rpm
Bore and stroke	3.76 x 4.13 in (95,4 x 104,9 mm)
Voltage	24 V
Alternator	50 A
Starter	4,0 kW

ELETRICAL SYSTEM

Engine control	
1 - Dial type throttle control	
2 - Switch deceleration on the hand lever Automatic deceleration / Automatic stop and shutdown system	
3 - Emergency stop	
Lights	
1 - Work lights	
Top	24 V 70 W X 1
Boom	24 V 70 W X 2
Cab	24 V 70 W X 2
2 - Operator's Cabin compartment	24 V 10 W X 1
Battery	2 X 12 V 72 Ah/5hr
Safety	
1 - Travel alarm	
2 - Double horn	
Wire harness	Waterproof connectors

HYDRAULIC SYSTEM

Main pumps	2 axial piston pumps and variable flow with adjustment system
1 - Max. oil flow	2 x 37.5 gpm (142 l/min) @ 2200 rpm
2 - Work circuit pressure	
Boom/Arm/Bucket	4974 psi (34.3 MPa) 5337 psi (36.8 MPa) with auto power-up
Swing circuit	4046 psi (27.9 MPa)
Travel circuit	4974 psi (34.3 MPa)
Pilot pump	1 gear pump
1 - Max. oil flow	5.8 gpm (22 l/min)
2 - Working circuit pressure	566 psi (3.9 MPa)
Control valves	With support valve of the boom/arm. One 4-spool valve for the right track movement, acceleration of the arm, boom and bucket. One 5-spool valve for the movement of the left track, auxiliary, swing, arm, and boom acceleration.
Swing device	
1 - Motor	Axial piston motor with fixed displacement
2 - Brake	Mechanical disk brake with fixed displacement
3 - Final drive	Planetary gear reduction
4 - Turn table bearing	Ball bearing type with internal gear
5 - Max. swing speed	11.4 rpm
6 - Swing torque	32.2 lbf.ft (45,10 Nm)

Cylinder	Qty	Diam.Bore	x	Diam.Rod	x	Stroke
Boom	2	4.5 in (115 mm)	x	3.1 in (80 mm)	x	3 ft 10 in (1179 mm)
Arm	1	4.9 in (125 mm)	x	3.5 in (90 mm)	x	4 ft 2 in (1280 mm)
Bucket	1	4.1 in (105 mm)	x	2.9 in (75 mm)	x	3 ft 2 in (985 mm)

Filters	
Suction filter	105 µm
Return filter	6 µm
Pilot line filter	8 µm

HYDRAULIC CONTROLS

Boom/Arm/Bucket/Swing control system	Command pressure (ISO control pattern)
Travel	Commend pressure control system
Work mode selection	
1 - Mode – SP	
2 - Mode – H	
3 - Mode – Auto	
Travel mode selection	(2 speeds)
Attachment cushion control	
Hydraulic lock	(door block, left side tilt console)

MONITOR SYSTEM

1 - Message display (warning, condition, etc...)
2 - Work mode display (SP, H, Auto)
3 - Machine state (power multiplier, etc...)
4 - Alarm and buzzer display
5 - Water temperature
6 - Hydraulic oil temperature
7 - Fuel level
8 - System diagnose

1836_17_CCE_Encarte_Escavadeira_CX180C_IO.indd 1 16/03/18 18:40

OPERATOR'S ENVIRONMENT

Operator's cabin

1 - Round shaped and smoothly designed cabin
2 - Safety glass on all windows
3 - Impact-proof cabin suspension for 4 cushion hydraulic mounting
4 - Sliding front window with automatic lock
5 - Full color LCD screen included
6 - Windscreen wipers and washer
7 - AM/FM radio with automatic tuner
8 - Floor carpet
9 - Ceiling hatch of polycarbonate and sun protection
10 - Automatic air conditioning
11 - Top FOPS defense level 1 (on the cabin's structure)
12 - Rollover protective structure (ROPS)
13 - Noise level
Internal 68 dB (According to ISO 6396)
External 99 dB (According to ISO 6395)

OPERATOR'S SEAT

Low frequency mechanical suspension with helical spring and double acting hydraulic damper. (Achieving the EM 6 category in ISO 7096)

With the following characteristics

1 - Manual weight adjustment
2 - Backrest angle adjustment
3 - Seat height adjustment, adjustable armrest attached to the consoles
4 - Adjustable headrest
5 - Retractable seatbelt
6 - Adjustable back support
7 - The control consoles are adjusted independently from the seat

Safety

1 - Back view mirror (cabin side and right side)
2 - Travel alarm
3 - Double horn

UNDERCARRIAGE

Travel motor	Axial piston motor with variable piston displacement
Brake	Mechanical disk brake
Hydraulic service brake	Brake valve
Final drive	Planetary gear reduction
Travel speeds	
High	3.3 mph (5,4 km/h) (Automatic speed change)
Low	1.7 mph (2,7 km/h)
Drawbar push	36194 lbf (161 kN)
Number of upper rollers	2 (on each side)
Number of lower rollers	7 (each side)
Number of shoes	44 (on each side)
Type of shoes	Triple shoes
Link pitch	7.5 in (190 mm)
Shoes width - STD	1' 11" (600 mm)
Grade-ability	70% (35 °)

SHOES WEIGHT

Shoes	1' 11" (600 mm)	2307.8 lb (1046,8 kg)
	2' 3" (700 mm)	3067.3 lb (1391,3 kg)
Arm	8' 7" (2,62 m)	1320 lb (599 kg)
	10' (3,05 m)	1355.8 lb (615 kg)

(Weight of bucket page 4)

OPERATIONAL WEIGHT

Operating weight	37919 lb (17.200 kg)

With 8' 7" (2,62 m) arm, 0.81 yd³ (0,62 m³) bucket, 1' 11" (600 mm) shoes, operator, lubricant, coolant and full fuel tank.

Shipping weight	36155 lb (16.400 kg)

Operating weight – Operator's weight 165 lb (75kg) + 90 % of the fuel weight + bucket weight 1102 lb (500kg).

Counterweight	7495 lb (3.400 kg)
Ground pressure	5.97 psi (0,42 kgf/cm²)

With 8' 7" (2,62 m) arm, 0.81 yd³ (0,62 m³) bucket and 1' 11" (600 mm) triple shoes.

DIGGING FORCE WITH 0.81 YD³ (0.62 M³) BUCKET

ISO 6015	8 ft 7 in (2,62 m)	10 ft (3,05 m)
Arm digging force	17760 lbf (79 kN)	16186 lbf (72 kN)
With auto power-up	18884 lbf (84 kN)	17310 lbf (77 kN)
Bucket digging force	25178 lbf (112 kN)	25178 lbf (112 kN)
With auto power-up	26527 lbf (118 kN)	26527 lbf (118 kN)

TRANSPORT DIMENSIONS

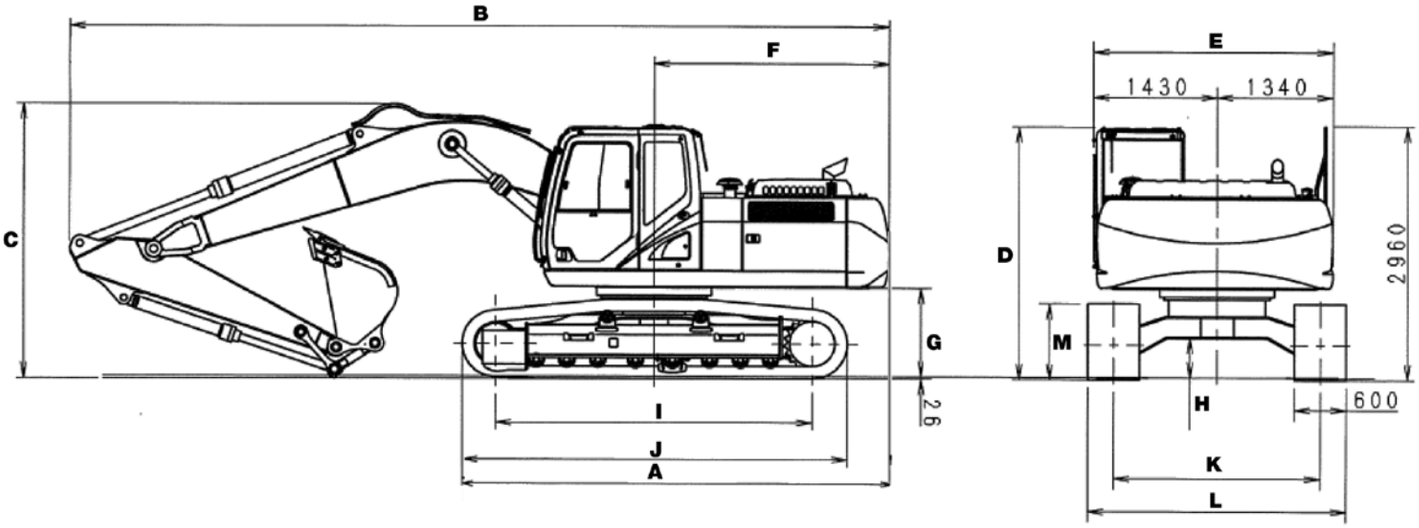

1836_17_CCE_Encarte_Escavadeira_CX180C_IO.indd 2 16/03/18 18:40

DIMENSIONS

ARM	8' 7" (2,62 m)	10' (3,05 m)
A. Total length (without accessory)	14' 4.7" (4410 mm)	14' 4.7" (4410 mm)
B. Total length (with accessory)	27' 10.4" (8440 mm)	27' 10.9" (8500 mm)
C. Total height (with accessory)	9' 10" (2960 mm)	10' 10" (3130 mm)
D. Cabin height	9' 3.4" (2940 mm)	9' 3.4" (2940 mm)
E. Upper structure total width	8' 3.9" (2540 mm)	8' 3.9" (2540 mm)
F. Swing radius (back end)	8' 8.9" (2450 mm)	8' 8.9" (2540 mm)
G. Clearance height under upper structure	3' 8.3" (1020 mm)	3' 8.3" (1020 mm)
H. Minimum distance to ground	1' 9" (420 mm)	1' 9" (420 mm)
I. Distance between shafts (from center to center of the wheels)	10' 11" (3190 mm)	10' 11" (3190 mm)
J. Full track length	13' 1.4" (3990 mm)	13' 1.4" (3990 mm)
K. Track gauge	6' 4.6" (1990 mm)	6' 4.6" (1990 mm)
L. Undercarriage overall width with 1' 11" (600 mm) shoes	8' 3.9" (2590 mm)	8' 3.9" (2590 mm)
M. Crawler track height	3' 8.4" (920 mm)	3' 8.4" (920 mm)

WORK RANGE CHART

LEVEL EXCAVATION WITH 8' 7" (2,62 M) ARM

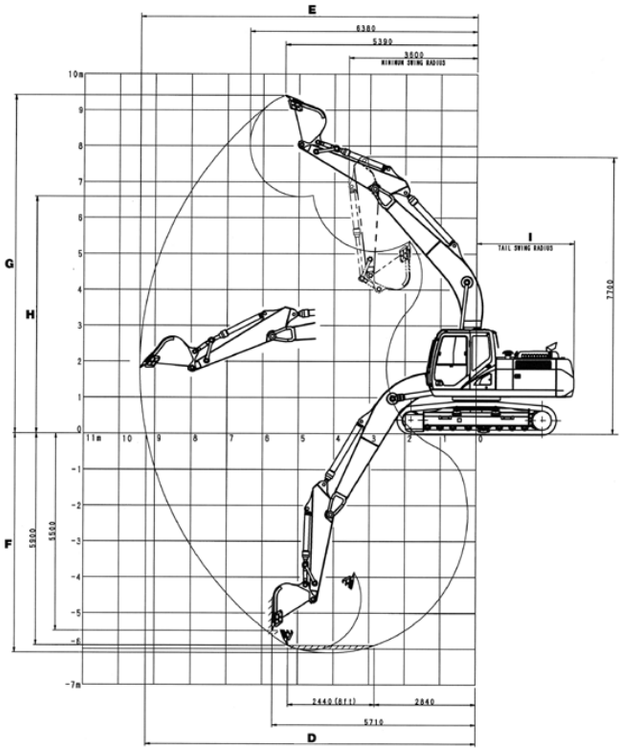

LEVEL EXCAVATION WITH 10' (3,05 M) ARM

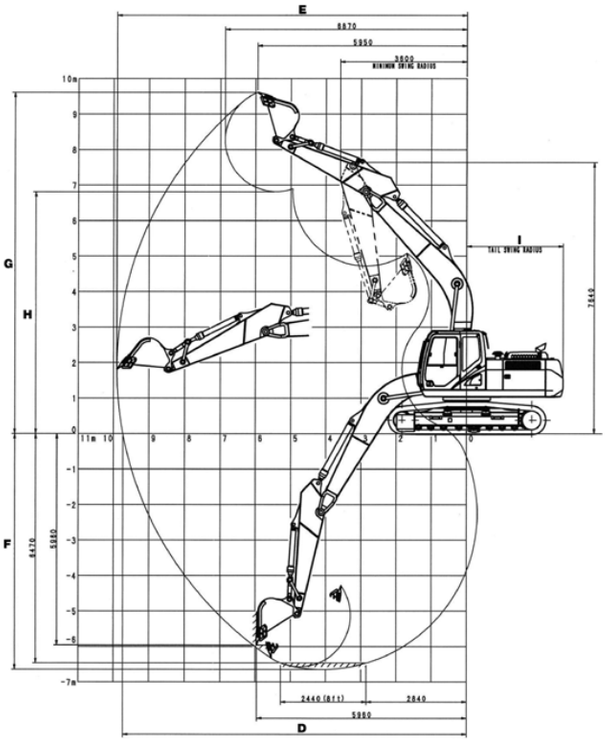

WORK RANGE

ARM	8' 7" (2,62 m)	10' (3,05 m)
A. Boom length	16' 6.5" (5150 mm)	16' 6.5" (5150 mm)
B. Bucket radius	4' 10" (1350 mm)	4' 10" (1350 mm)
C. Bucket action angle	178°	178°
D. Maximum reach at ground level	29' 11" (8870 mm)	30' 5.2" (9220 mm)
E. Max. reach	29' 3.1" (9040 mm)	30' 9.8" (9380 mm)
F. Max. digging depth	19' 11" (6060 mm)	21' 1.1" (6490 mm)
G. Max. digging height	30' 0.7" (9240 mm)	30' 3.1" (9290 mm)
H. Max. dumping height	21' 2" (6610 mm)	21' 10" (6690 mm)
I. Swing radius (back end)	8' 8.9" (2450 mm)	8' 8.9" (2450 mm)

1836_17_CCE_Encarte_Escavadeira_CX180C_IO.indd 3 16/03/18 18:40

SYSTEM FLUIDS CAPACITIES AND SPECIFICATIONS

	Capacities	Specifications
Hydraulic system	43.5 gal (165 l)	ISO VG 46
Hydraulic tank	23.7 gal (90 l)	ISO VG 46
Fuel tank	79.2 gal (300 l)	(Diesel)
Cooling system	4.3 gal (16,2 l)	Coolant 55 %, Water 45 %
Final drive case (on each side)	1.5 gal (5,8 l)	API GL-4 90
Swing mechanism	1.3 gal (5,0 l)	API GL-5 90
Engine housing (with remote oil filter)	4.5 gal (17 l)	API CD SAE 10W-30

NOTE:
1 - Case Construction is constantly improving its products and therefore it reserves the right to modify its design and specifications at any time.
2 - The graphics may include optional units and may not include all the standard units.
3 - These specifications refer to the ISO 7135 standard (Land machinery – hydraulic excavators – Terminology and commercial specifications) second edition date 12/15/2009

LIFT CAPACITY

Arm 8 ft (2.62 m), Bucket 1.5 yd³ (0,62 m³)\

	0 ft (0 m)		5 ft (1.5 m)		10 ft (3 m)		15 ft (4.5 m)		20 ft (6 m)		25 ft (7.5 m)		30 ft (9 m)		MAXIMUM REACH		
	FRONT	SIDE	FRONT	SIDE	FRONT	SIDE	FRONT	SIDE	FRONT	SIDE	FRONT	SIDE	FRONT	SIDE	FRONT	SIDE	ft (m)
25 ft (7.5 m)									5709 lb (2590 kg)*	5709 lb (2590 kg)*					3461 lb (1570 kg)*	3461 lb (1570 kg)*	21 ft 5 in (6,53 m)
20 ft (6 m)									7076 lb (3210 kg)*	7076 lb (3210 kg)*	4453 lb (2020 kg)*	4453 lb (2020 kg)*			3152 lb (1430 kg)*	3152 lb (1430 kg)*	25 ft 2 in (7,69 m)
15 ft (4.5 m)									9303 lb (4220 kg)*	8179 lb (3710 kg)	7010 lb (3180 kg)*	5511 lb (2500 kg)			3064 lb (1390 kg)*	3064 lb (1390 kg)*	27 ft 5 in (8,36 m)
10 ft (3 m)					18827 lb (8540 kg)*	18827 lb (8540 kg)*	13580 lb (6160 kg)*	12323 lb (5590 kg)	10846 lb (4920 kg)*	7738 lb (3510 kg)	8179 lb (3710 kg)	5313 lb (2410 kg)			3130 lb (1420 kg)*	3130 lb (1420 kg)*	28 ft 5 in (8,68 m)
5 ft (1.5 m)					19378 lb (8790 kg)*	19378 lb (8790 kg)*	17196 lb (7800 kg)*	11375 lb (5160 kg)	11419 lb (5180 kg)	7297 lb (3310 kg)	7936 lb (3600 kg)	5070 lb (2300 kg)			3351 lb (1520 kg)*	3351 lb (1520 kg)*	28 ft 6 in (8,70 m)
0 ft (0 m)					16512 lb (7490 kg)*	16512 lb (7490 kg)*	17614 lb (7990 kg)	10692 lb (4850 kg)	11001 lb (4990 kg)	6944 lb (3150 kg)	7738 lb (3510 kg)	4894 lb (2220 kg)			3725 lb (1690 kg)*	3725 lb (1690 kg)*	27 ft 8 in (8,44 m)
- 5 ft (- 1.5 m)			13293 lb (6030 kg)*	13293 lb (6030 kg)*	14638 lb (6640 kg)*	19819 lb (8990 kg)	17306 lb (7850 kg)	10449 lb (4740 kg)	10824 lb (4910 kg)	6768 lb (3070 kg)	7694 lb (3490 kg)	4894 lb (2220 kg)			4431 lb (2010 kg)*	4431 lb (2010 kg)*	25 ft 9 in (7,87 m)
- 10 ft (- 3 m)			18959 lb (8600 kg)*	18959 lb (8600 kg)*	28307 lb (12840 kg)*	20569 lb (9330 kg)	17394 lb (7890 kg)	10560 lb (4790 kg)	10912 lb (4950 kg)	6878 lb (3120 kg)					5864 lb (2660 kg)*	5489 lb (2490 kg)	22 ft 9 in (6,95 m)
- 15 ft (- 4.5 m)			27645 lb (12540 kg)*	27645 lb (12540 kg)*	23016 lb (10440 kg)*	21054 lb (9550 kg)	15476 lb (7020 kg)	11045 lb (5010 kg)							10207 lb (4630 kg)*	8002 lb (3630 kg)	18 ft 0.5 in (5,50 m)

Arm 10 ft (3,05 m), Bucket 1.5 yd³ (1.10 m³)

	0 ft (0 m)		5 ft (1.5 m)		10 ft (3 m)		15 ft (4.5 m)		20 ft (6 m)		25 ft (7.5 m)		30 ft (9 m)		MAXIMUM REACH		
	FRONT	SIDE	FRONT	SIDE	FRONT	SIDE	FRONT	SIDE	FRONT	SIDE	FRONT	SIDE	FRONT	SIDE	FRONT	SIDE	ft (m)
25 ft (7.5 m)									4629 lb (2100 kg)*	4629 lb (2100 kg)*					4629 lb (2100 kg)*	4629 lb (2100 kg)*	19 ft 8 in (6,00 m)
20 ft (6 m)									8267 lb (3750 kg)*	8267 lb (3750 kg)*	4453 lb (2020 kg)*				4210 lb (1910 kg)*	4210 lb (1910 kg)*	23 ft 9 in (7,26 m)
15 ft (4.5 m)							10979 lb (4980 kg)*	10979 lb (4980 kg)*	10097 lb (4580 kg)*	8090 lb (3670 kg)	7010 lb (3180 kg)*	5467 lb (2480 kg)			4100 lb (1860 kg)*	4100 lb (1860 kg)*	26 ft 1 in (7,97 m)
10 ft (3 m)					20855 lb (9460 kg)*	20855 lb (9460 kg)*	14682 lb (6660 kg)*	12147 lb (5510 kg)	11508 lb (5220 kg)*	7672 lb (3480 kg)	8179 lb (3710 kg)	5291 lb (2400 kg)			4188 lb (1900 kg)*	4188 lb (1900 kg)*	27 ft 3 in (8,31 m)
5 ft (1.5 m)					14065 lb (6380 kg)*	14065 lb (6380 kg)*	18077 lb (8200 kg)*	11375 lb (5160 kg)	11375 lb (5160 kg)	7275 lb (3300 kg)	7936 lb (3600 kg)	5092 lb (2310 kg)			4453 lb (2020 kg)*	4254 lb (1930 kg)	27 ft 4 in (8,33 m)
0 ft (0 m)					15740 lb (7140 kg)*	15740 lb (7140 kg)*	17592 lb (7980 kg)	10692 lb (4850 kg)	11023 lb (5000 kg)	6966 lb (3160 kg)	7738 lb (3510 kg)	4938 lb (2240 kg)			4960 lb (2250 kg)*	4409 lb (2000 kg)	26 ft 5 in (8,06 m)
- 5 ft (- 1.5 m)			14881 lb (6750 kg)*	14881 lb (6750 kg)*	22332 lb (10130 kg)*	20017 lb (9080 kg)	17394 lb (7890 kg)	10538 lb (4780 kg)	10890 lb (4940 kg)	6856 lb (3110 kg)	5489 lb (2490 kg)				5886 lb (2670 kg)*	4960 lb (2250 kg)	24 ft 5 in (7,46 m)
- 10 ft (- 3 m)			20965 lb (9510 kg)*	20965 lb (9510 kg)*	27205 lb (12340 kg)*	20855 lb (9460 kg)	17548 lb (7960 kg)	10714 lb (4860 kg)	11089 lb (5030 kg)	7076 lb (3210 kg)					7936 lb (3600 kg)*	6217 lb (2820 kg)	21 ft 3 in (6,48 m)
- 15 ft (- 4.5 m)					20811 lb (9440 kg)*	20811 lb (9440 kg)*	13293 lb (6030 kg)*	11199 lb (5080 kg)							11486 lb (5210 kg)*	9656 lb (4380 kg)	16 ft 1 in (4,92 m)

1836_17_CCE_Encarte_Escavadeira_CX180C_IO.indd 4 16/03/18 18:40

BUCKET INFORMATION

CX180C – ISO

BUCKET	CAPACITY yd³ (m³)	WIDTH ft in (mm)	WEIGHT lb (Kg)	NUMBER OF TEETH	CNHI NUMBER
HD (HC)	0.65 (0,50)	2’ 2” (660,40)	1474 (669)	4	84404131
HD (HC)	0.83 (0,64)	2’ 8” (812,80)	1624 (737)	4	84404132
HD (HC)	1.03 (0,79)	3’ 2” (965,20)	1825 (828)	5	84404133
HD (HC)	1.21 (0,93)	3’ 8” (1117,60)	1999 (907)	5	84404134
HD (HC)	1.41 (1,08)	4’ 2” (1270,00)	2200 (998)	6	84422937

Note: HD (Heavy Duty)
SC (Standard Capacity)
HC (High Capacity)
SCK (Side Cutter Kit)

1836_17_CCE_Encarte_Escavadeira_CX180C_IO.indd 5 16/03/18 18:40

SERIES EQUIPMENT

Operator's compartment

- Round shaped and smoothly designed pressurized cabin
- Safety glass on all windows
- Impact-proof cabin suspension for 4 cushion hydraulic mounting
- Sliding front window with automatic lock
- Full color LCD screen included
- Windscreen wipers and washer
- AM/FM radio with automatic tuner
- Floor carpet
- Ceiling hatch of polycarbonate and sun protection
- Automatic air conditioning
- Top FOPS defense level 1 (on the cabin's structure)
- Rollover protection structure (ROPS)
- Operator's seat with low frequency mechanical suspension con helical spring and double acting hydraulic dumper, manual weight adjustment, back angle adjustment, adjustable armrest height attached to the consoles, adjustable headrest, retractable seatbelt and adjustable back support.
- The control consoles are adjusted independentlyfrom the seat
- Rear mirror
- Double horn
- Travel alarm
- Joystick-like levers to control hydraulic functions
- Safety levers to neutralize hydraulic functions and star the engine
- On-board telematics (SiteWatch) as standard on machines manufactured after 2018

Engine

- 4-stroke engine, water-cooled, 4 cylinder – common rail injection system, turbocharged with air-cooled intercooler, with tier 3 emission certification.

Electric System

Wiring with waterproof connectors

Battery	2 x 12V 72 Ah/5HR
Voltage	24 V
Alternator	50 A
Starter engine	5,0 kW

Hydraulic System

- With ISO control pattern
- Work mode selection Auto, H and SP
- Auxiliary accessory mode
- Auto power up
- 2 variable flow pumps
- Electronic flow control
- Cylinders with end cushioning
- 1 pump for the pilot system
- 8' 7" (2,62 m) long arm

Undercarriage

Travel speeds	
High	3.3 mph (5,4 km/h) (Automatic speed change)
Low	1.6 mph (2,7 km/h)
Quantity of transport rollers:	
Quantity of upper rollers	2 (on each side)
Quantity of lower rollers	7 (on each side)
Number of shoes	44 (on each side)
Shoes width	1' 11" (600 mm)
Type of shoes	Triple grousers
Track guage	13' 1" (3990 mm)
Track length	6' 6" (1990 mm)
Track guide	Simple
Sealed and lubricated chains	

OPTIONAL EQUIPMENT

Cabin

- Seat with air suspension
- 2 options for front stone protection
- Level 2 FOPS superior protection
- Rain deflector
- Sun screen

Accessories

- 10' (3,05 m) long arm
- Heavy Duty bucket and link with hook
- Tropical cooling
- Six options for auxiliary accessory
- Rubber fender protector
- Additional handrails Rh + Lh
- Safety valve for the boom

Undercarriage

- 2' 3.5" (700 mm) shoes
- Triple track guide

Other

- Rear view camera
- Side view camera
- Refueling pump
- Aux. Hydraulic
- Aux. Low fluid hydraulic

CASE CONSTRUCTION | SiteWatch™ Fleet monitoring and tracking management system through satellite or mobile phone

Case reserves the right to implement improvements in the project and alterations to the specifications at any time, without prior notice, and not being liable to install them in previously sold units. The specifications, descriptions and graphics correctly reflect the information known to this day in this publication. This information may vary in different regions and may be subject to changes without previous notice. The graphics may include equipment and optional accessories, and may not include all the standard units.

COMUNICACIONES AMERICA LATINA ©

CCEIO011 – 3/2018 – Printed in Brazil

CaseCE.com

CNH INDUSTRIAL | CAPITAL

Factories

Contagem – Minas Gerais – Brazil
Av. General David Sarnoff, 2.237
Inconfidentes – C.P. 32210-900
Tel.: +55 31 2104-3392

Sorocaba – São Paulo – Brazil
Av. Jerome Case, 1.801
Éden – C.P. 18087-220
Tel.: +55 15 3334-1700