WHEEL LOADER

CASE CONSTRUCTION

SINCE 1842.

621E

ENGINE

Brand	FPT
Model	F4HE96849*J101
Type	4 stroke, turbocharged, cooling system air-watter, Mar-I/Tier 3
Cylinders	6
Bore x stroke	104 x 132 mm (4,09 x 5,19in)
Displacement	6,7 L (6.700 cm³)
Fuel injection	Direct - Common Rail
Fuel	Diesel
Fuel filter	disposable cartridge full flow threadable
Air filter	Dry type element with obstruction alert

Cooling pack with central assemble

Fan – Hydraulic driven	
Type	suction with 8 wings
Diameter	711 mm (28 in)
Water pump	
Type	Integral

Oil filter
Disposable, cartrige, full flow threadable

Horsepower	
Standard Power	
Gross	142 hp (106 kW) at 1,800 rpm
Net Power	137 hp (102 kW) at 2,000 rpm
Eco Power	
Gross	133 hp (99 kW) at 1,600 rpm
Net Power	111 hp (83 kW) at 2,000 rpm

NOTE: Power and gross torque according SAE J1995.
Power and net torque according SAE J1349.

Torque	
Standard Power	
Gross	613 N.m (62,5 kgf.m) at 1.400 rpm
Eco Power	
Gross	613 N.m (62,5 kgf.m) at 1.400 rpm

POWER TRAIN

Transmission 4F/3R
Proportional with electronic control module, automatic torque sensitive shift and manual shift

Gears		Helical
Gears ratio	Forward	Reverse
1st	4,012	3,804
2nd	2,174	2,061
3th	1,088	1,031
4th	0,619	don´t available

Torque converter Ratio	2,66:1
Differential	Limited slip on front and rear axles
Rear axle oscillation	24° total

Axles

Differential Ratio	3,440
Planetary Ratio	6,000
Final axle ratio	20,667

Service brakes
Hydraulically driven, maintenance free, multiple discs immersed in oil with accumulator for the four wheels. Brake system in accordance with ISO 3450

Parking brake
Spring driven and hydraulically released
Assembled on the output shaft of the transmission

Ground speeds – km/h with tires 20,5x25 L3

Standard Power		
	Forward	Reverse
1st	6,8	7,1
2nd	11,9	12,6
3th	21,8	23,2
4th	32,9	don´t available

Eco Power		
	Forward	Reverse
1st	6,8	7,3
2nd	12,4	13,1
3th	23,1	24,6
4th	36,4	don´t available

ELECTRICAL SYSTEM

Voltage	24 volts, negative to ground
Alternator	120 A
Batteries	(2) 12 V

HYDRAULIC SYSTEM

Pump (Steering/implements)
Axial piston pump with compensated pressure and flow

Variable displacement
176 L/min at 2.000 rpm at 248,22 bar (46,5 gpm at 2.000 rpm at 3.600 psi)

Loader control valve
Closed centered, sectional 2, 3 or 4 reels, with pilot control for lifting and tilting, auxiliary hydraulic system and electromagnetic detentions for lifting, floating and tilting.

Loader steering
Orbital hydraulics, with articulation centered on pivot with oil flow according to demand.

Steering system in accordance with SAE J1511 and ISO 5010

Main relief pressure	250 bar (3.625 psi)
Filter	10 micron filter, disposable cartridges full flow in the return line, filter restriction indicator light

CYLINDERS

Lifting cylinders	
Cylinder bore	114,3 mm (4.5 in)
Rod diameter	63,5 mm (2.5 in)
Stroke	787,6 mm (31,0 in)
Unload cylinder	
Cylinder bore	127,0 mm (5.0 in)
Rod diameter	76,2 mm (3.0 in)
Stroke	619,7 mm (24.4 in)
Steering cylinder	
Cylinder bore	69,9 mm (2.75 in)
Rod diameter	38,1 mm (1.5 in)
Stroke	462,5 mm (18.2 in)

INSTRUMENTS

- Electronic Information Center
- Indicators/gauges
- Tachometer
- Selected steering F/N/R
- Transmission Modes
- Gear shift mode – automatic/manual
- Selected gear
- Gear in use
- Steering indicator
- Engine cooling temperature
- Engine oil pressure
- Fuel level
- Transmission oil temperature
- Hydraulic oil temperature
- Battery charge indicator
- Hourmeter
- Pilot lights
- Rotating light*
- Work lights
- Loader controls locked
- Low coolant level
- Brake pressure
- Master indicator
- Parking brake
- Air conditioning
- Restriction indicator for:
  Hydraulic oil filter
  Transmission filter
  Air filter
- Audible alerts for vital functions
- Rear alert
- Horn

* Optional

OPERATOR COMPARTMENT

- ROPS/FOPS Cab
  In according with ISO 3471, 3449
- Air conditioner
- Auxiliary front headlights
- Two-speed front windshield wiper
- Timer and water jet
- Height and load adjustable fabric seat, with mechanical suspension and reclining
- Armrest
- Seat belt
- Single control lever
- Hydraulic power steering
- Steering column with angle adjustment
- Steering wheel spinner knob
- Internal and external rearview mirrors
- Gear key F/N/R

LOADER

- Unique lift and tilt control
- Floatation with positive retention
- Automatic dig return
- Automatic height control
- Automatic shift return
- Disconnecting the transmission on the brake pedal (DeClutch)

CYCLE TIMES

Raise bucket with nominal load	7,7 s
Unload bucket with nominal load	
Z-Bar	1,5 s
Descent (empty)	
With power	3,9 s
Flotation	4,3 s
Total	13,5 s

SERVICE CAPACITY

Fuel tank	189 L
Hydraulic system	
Overhall	114 L
Reservoir	56,8 L
Transmission	25,6 L
Service with filter	33,4 L
Front and Rear Axles	
Total/Axle	21,0 L
Engine oil with filter	15,3 L
Cooling system	24,0 L
Engine crankcase	14,5 L
Windshield washer reservoir	4,75 L

OPERATING WEIGHT

Z-Bar

Unit equipped with ROPS / FOPS cab with heater and air conditioning, counterweight, 20.5x25 16 PLY L3 tires, front and rear fenders, 2.1 m³ (2.75 yd³) multipurpose bucket with teeth, fuel tank full and 79 kg operator's weight.

11.945 kg (26,334 lb)

DIMENSIONS

	17,5 X 25 - L2 Bias tire	20,5 X 25 - L2/L3 Bias tire
Height to		
A. Top of cab ROPS	3259 mm (10' 8,3")	3.303 mm (10' 10")
Drawbar	992 mm (3' 3,0")	992 mm (3' 3,0")
B. Height to the top of exhaust	2.851 mm (9' 4,2")	2.895 mm (9' 6,0")
C. Wheelbase	2.900 mm (9' 6,2")	2.900 mm (9' 6,2")
D. Ground clearance	406 mm (1' 4,0")	450 mm (1' 5,7")
G. Rear departure angle	30°	30°
E. Total width w/o bucket	2.324 mm (7' 7,5")	2.447 mm (8' 0,3")
F. Tread width (tread center to center)	1.880 mm (6' 2,0")	1.920 mm (6' 3,6")
P. Turning radius (Outside of Tires)	N/D	5.207 mm (17' 1,0")
Steering angle from the center	40°	40°
Overall angle	80°	80°
Rear axle oscillation	24°	24°

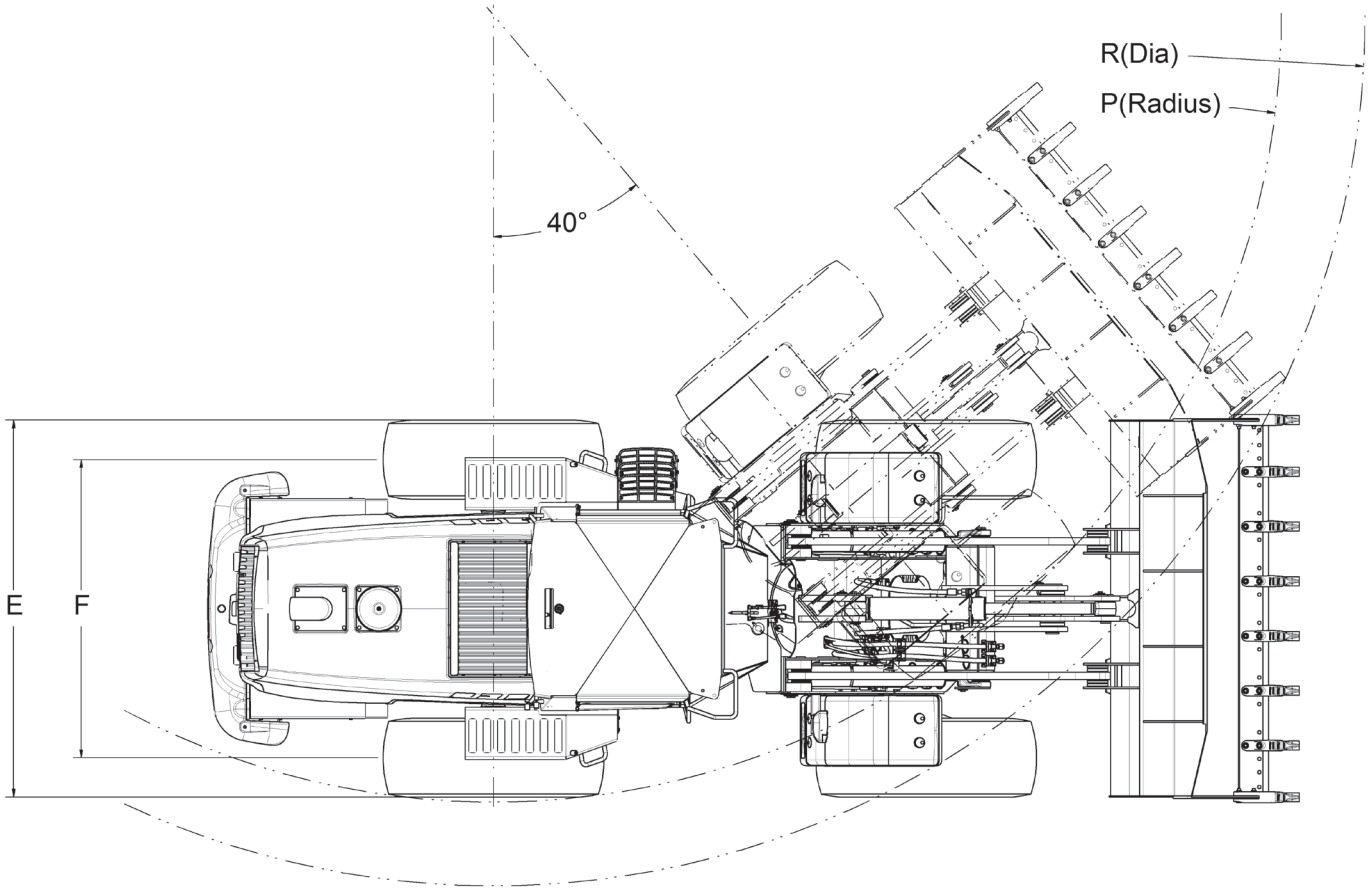
R(Dia)
P(Radius)
40°
E
F

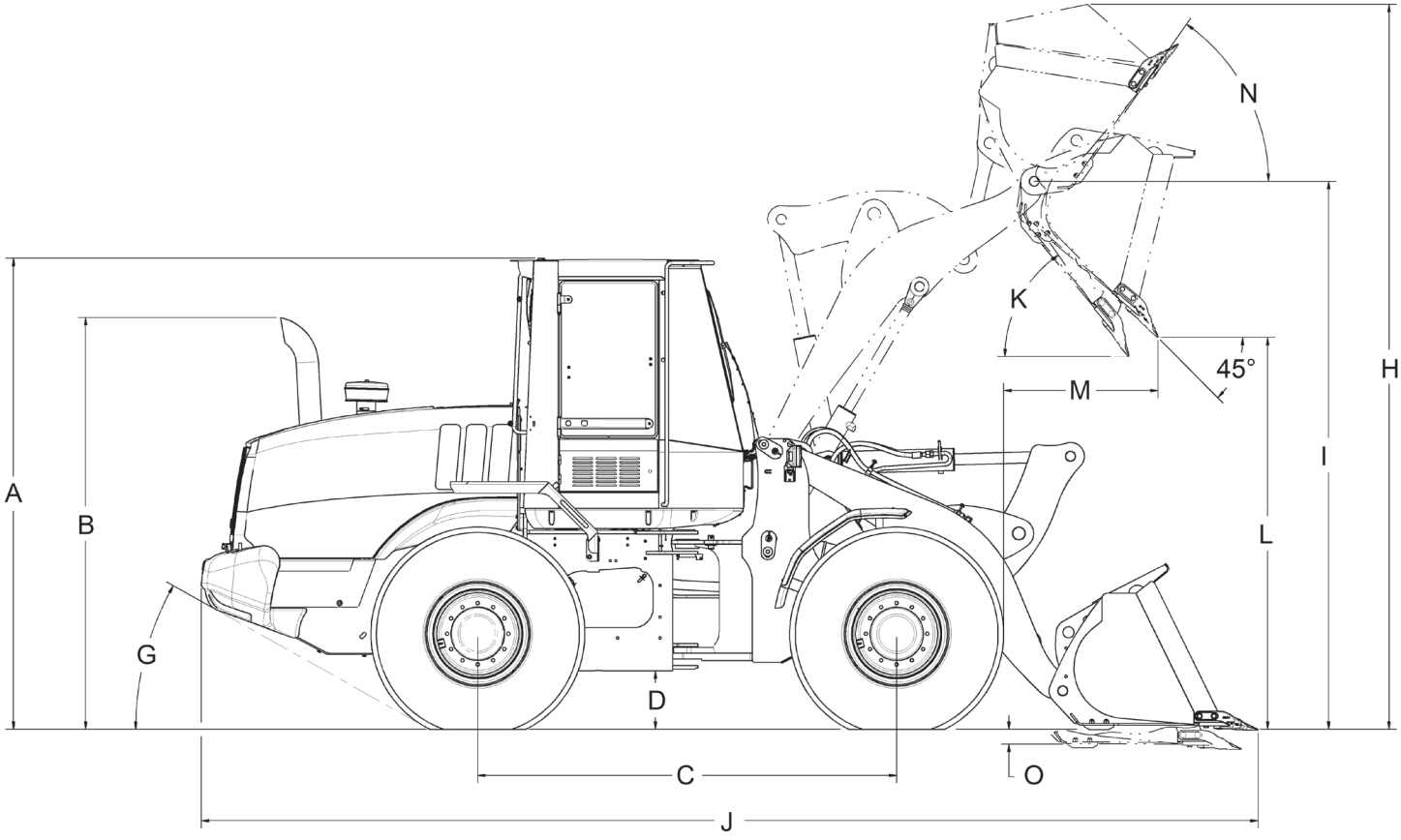
N
K
45°
M
H
I
L
A
B
G
D
C
O
J

WEIGHT ADJUSTMENTS

Select options	Weight setup	Tipping load adjustment	Load adjustment tipping articulated at 40º
Tires 20,5x25 12 canvas L2	-276 kg (-608 lb)	-202 kg (-445 lb)	-179 kg (-395 lb)
Tires 20,5x25 16 canvas L3	-244 kg (-538 lb)	-179 kg (-395 lb)	-158 kg (-348 lb)

NOTE:
Unit equipped with 2.1 m³ (2.75 jd³) multi-purpose bucket with bolted edge, 20.5 x 25 16 canvas L3 tires, ROPS/FOPS cab with heating and air conditioning, counterweight, std. battery, front and rear fenders, fuel tank full and 79 kg operator. Adjust the selected options from the nominal weight.

2,1 m³ bucket with teeth and segmented cutting edge	+70 kg (+154 lb)	+52 kg (+115 lb)	+45 kg (+99 lb)

NOTE:
Unit equipped with 2.1 m³ (2.75 jd³) multi-purpose bucket with teeth and segmented cutting edge, 20.5 x 25 16 canvas L3 tires, ROPS/FOPS cab with heating and air conditioning, counterweight, std. battery, front and rear fenders, fuel tank full and 79 kg operator. Adjust the selected options from the nominal weight.

PERFORMANCE DATA

	621E Z-Bar	Bucket 1,56 m³ (2,0 yd³) Z-Bar lift arm Spade nose	Bucket 1,9 m³ (2,5 yd³) Z-Bar lift arm Teeth & Segmented Cutting Edge	Bucket 2,1 m³ (2,75 yd³) Z-Bar lift arm Teeth	Bucket 2,3 m³ (3,0 yd³) Z-Bar lift arm Teeth	Bucket 3,0 m³ (3,9 yd³) Z-Bar lift arm Bolt-on edge
	Bucket capacity - struck (SAE)	1,34 m³ (1,75 yd³)	1,66 m³ (2,17 yd³)	1,77 m³ (2,32 yd³)	1,96 m³ (2,56 yd³)	2,55 m³ (3,34 yd³)
	Heaped	1,56 m³ (2,0 yd³)	2,05 m³ (2,68 yd³)	2,1 m³ (2,75 yd³)	2,3 m³ (3,01 yd³)	3,0 m³ (3,92 yd³)
	Bucket width - external	2.580 mm (101.6 in)	2.605 mm (102.5 in)	2.602 mm (102.4 in)	2.602 mm (102.4 in)	2.602 mm (102.4 in)
	Weight of bucket	816 kg	860 kg	816 kg	858 kg	1.026 kg
H.	Fully raised operating height with retaining plate	4.848 mm (190.9 in)	5.002 mm (196.9 in)	4.965 mm (195.5 in)	5.040 mm (198.4 in)	5.318 mm (209.4 in)
I.	Height to hinge pin totally raised	3.829 mm (150.8 in)	3.829 mm (150.8 in)	3.829 mm (150.8 in)	3.829 mm (150.7 in)	3.828 mm (150.7 in)
J.	Total length - bucket leveled on the ground	7.142 mm (281.2 in)	7.216 mm (284.1 in)	7.325 mm (288.4 in)	7.360 mm (289.8 in)	7.482 mm (294.6 in)
K.	Dump angle - fully raised	55°	55°	55°	55°	50°
L.	Unloading height fully raised, dump at 45°	2.879 mm (113.3 in)	2.802 mm (110.3 in)	2.754 mm (108.4 in)	2.707 mm (106.6 in)	2.546 mm (100.2 in)
M.	Bucket reach fully raised, dump at 45°	965 mm (38.0 in)	1.024 mm (40.3 in)	1.073 mm (42.2 in)	1.118 mm (44.0 in)	1.107 mm (43.6 in)
	Bucket reach height 2.13 m, dump at 45°	1.505 mm (59.3 in)	1.526 mm (60.1 in)	1.544 mm (60.8 in)	1.568 mm (61.7 in)	1.455 mm (57.3 in)
	Operating load - ISO	4.722 kg	4.440 kg	4.476 kg	4.424 kg	4.201 kg
	Maximum material density - ISO	3.027 kg/m³	2.166 kg/m³	2.145 kg/m³	1.924 kg/m³	1.401 kg/m³
	Tipping load in a straight line - ISO	10.885 kg	10.254 kg	10.328 kg	10.215 kg	9.732 kg
	Tipping load articulated at 40° - ISO	9.444 kg	8.881 kg	8.953 kg	8.849 kg	8.402 kg
	Lifting Capacity - Maximum height	6.510 kg	6.454 kg	6.499 kg	6.456 kg	6.281 kg
	Lifting Capacity - Maximum reach	9.172 kg	9.102 kg	9.147 kg	9.102 kg	8.918 kg
	Lifting Capacity - Ground	13.163 kg	11.444 kg	11.696 kg	11.071 kg	8.963 kg
	Breakout force with discharge cylinder	11.476 kg	12.627 kg	11.841 kg	11.105 kg	8.792 kg
	Maximum recoil - Ground	40°	40°	41°	41°	41°
	Maximum recoil - Transport position	45°	45°	44°	44°	45°
	Maximum recoil - Maximum reach	53°	53°	53°	53°	53°
N.	Maximum recoil - Maximum height	55°	55°	55°	55°	55°
	Digging depth	58 mm (2.3 in)	79 mm (3.1 in)	84 mm (3.3 in)	90 mm (3.6 in)	88 mm (3.5 in)
	Maximum leveling angle with reverse drag bucket	60°	61°	62°	62°	64°
	Loader turning diameter	11.477 mm (451.9 in)	11.564 mm (455.3 in)	11.603 mm (457.7 in)	11.646 mm (458.5 in)	11.718 mm (461.3 in)

SELECTION OF BUCKETS

The graph is oriented in terms of bucket sizing based on density of materials and average working conditions. Additional factors such as tires, counterweight, terrain, climate and options, must be considered when choosing the bucket.

To select the ideal bucket size

1 Determine the density of the material to handle using the Material Density Table below

2 Find the density in the column (American or metric system) near the illustration of Bucket Selection from corresponding model.

3 Follow the density along your horizontal line to find which bucket(s) can be used for that material density.

The configuration of the standard machine and its options may vary according to the market where CASE operates

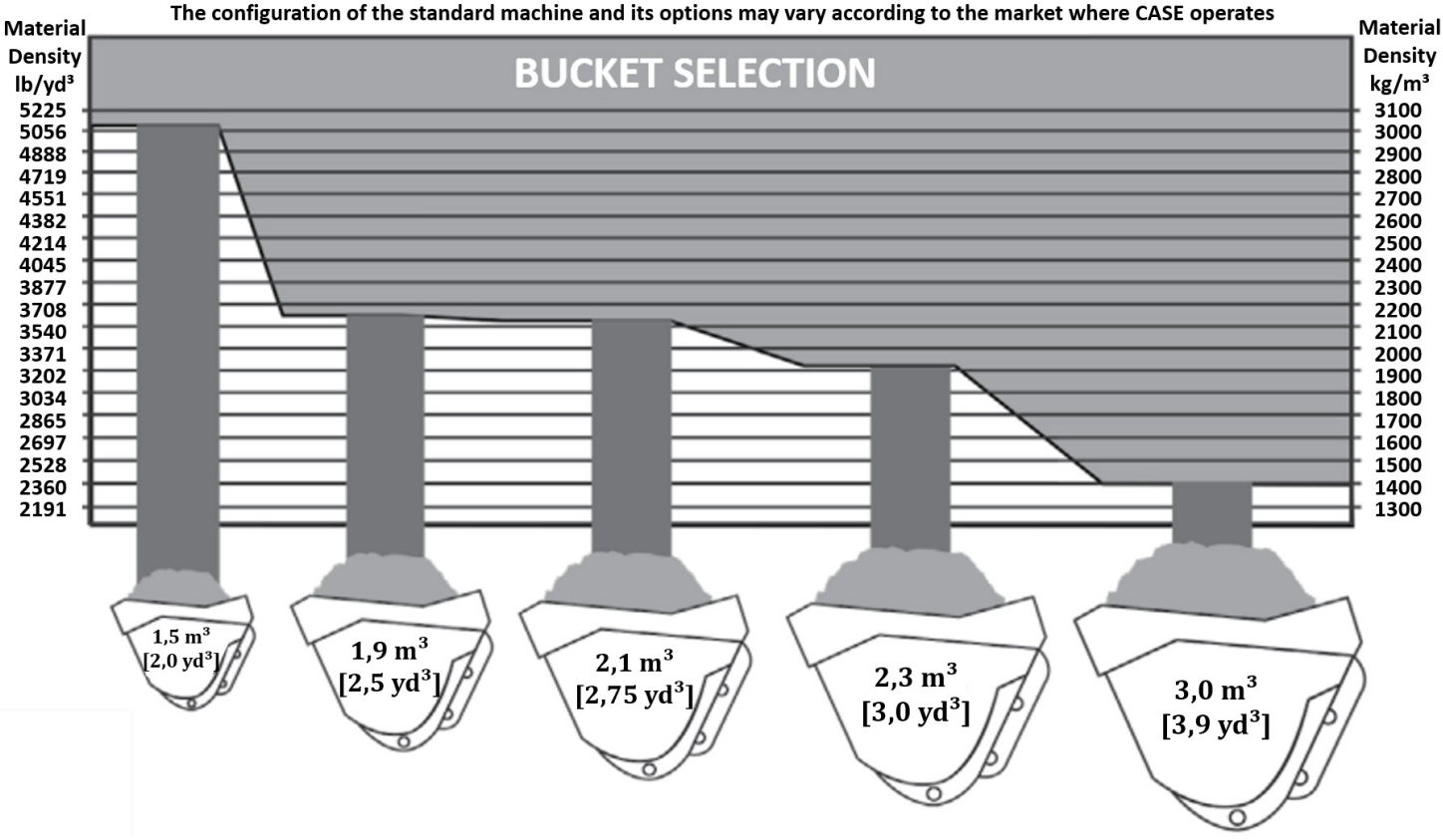

MATERIALS DENSITY

Material	Density
Calcium carbonate	1.250 kg/m³)
Clay	
Natural	1.600 kg/m³
Dry	1.480 kg/m³
Wet	1.660 kg/m³
With gravel, dry	1.420 kg/m³
With gravel, wet	1.540 kg/m³
Coal	
Anthracite, crushed	1.100 kg/m³
Bituminous, crushed	830 kg/m³
Granite, crushed	1.660 kg/m³
Schist	1.250 kg/m³
Slag, in pieces	1.750 kg/m³

Material	Density
Gravel	
Dry	1.510 kg/m³
Gravel	1.930 kg/m³
Dry, from ½” to 2”	1.690 kg/m³
Wet, from ½” to 2”	2.020 kg/m³
Crushed limestone	1.540 kg/m³
Sand	
Dry	1.420 kg/m³
Dry, from ½” to 2”	1.840 kg/m³
With gravel, dry	1.720 kg/m³
With gravel, wet	2.020 kg/m³
Sandstone, in pieces	1.250 kg/m³
Crushed stone	1.600 kg/m³

STANDARD EQUIPMENT

OPERATOR COMPARTMENT
Refer to page 2

Engine
FPT
MAR-I (Tier 3)
Turbocharger, diesel
Automatic adjustment of the alternator belt
Integral engine oil cooling
Hydraulic driven puller fan
Fuel filter with water separator
Air filter with two elements
Alternator 120 A
(2) batteries 12 V

Loader
Refer to page 2

POWER TRAIN
4 weel drive
Selectable 4F / 3R transmission automatic/manual
Electronic Control Module - Programmable
Proportional gear shifting controlled by computer with selection of programmable gears
On-board diagnostics
Single lever for electronic control of gear selection
Gear key F/N/R on lever to control the loader
Downshift button
Torque converter
External planetary axes
Limited slip diferential
Transmission oil cooler
Disconnecting the transmission by the brake pedal (DeClutch)
Oil-immersed hydraulic brake discs
Spring-applied parking brake hydraulically realeased
Limp-Home mode

Hydraulic system
Joystick loader control valve, with two hydraulic functions
Wide-angle and amplified flow steering system
Reversing hydraulic fan
(8) quick diagnostic couplings

Others
Front and rear fenders
Headlights
(2) headlights (high beam / low beam)
(2) front working headlights
(2) rear brake lights and reverse lights
(2) rear working headlights
Direction indicators / Front / rear warning lights
Standard Counterweight
Trailer pin
Joint locking bar
Lifting arm locking bar
Holder point and tie - front and rear
Reverse gear alarm
Remote drainage points
Centralized drainage points

Tires
20,5 x 25 16 lining L3 three pieces - 17” Rim

Note: The configuration of standard equipment may vary according the industry.

OPTIONAL EQUIPMENT

Loader
Quick coupling for accessories
Auxiliary hydraulic system for actuation of the quick coupling cylinder
Loader controls
Buckets (see page 5)

Hydraulic system
Auxiliary hydraulics
Ride Control
Loader valves with 3 or 4 hydraulic functions,
With 3 or 4 loader control lever
With joystick plus 1 or 2 loader control lever

Special versions
Version for corrosive environments:
- Parts with chamfered corners and special paint to protect against corrosive environments
- Application of special varnish to the entire machine surface for extra protection
- Bucket designed for handling fertilizer (3.0 m^3)
- Chassis with openings to prevent material accumulation
- Fertilizer resistant alternator
- Special protection for electrical terminals
- Tubes with extra surface treatment, for greater durability

Sugarcane version:
- Cyclonic prefilter at engine inlet and air conditioning for better system efficiency and avoid clogging
- Bucket designed for handling bagasse (3.0 m^3)
- Chassis with openings to prevent material accumulation
- Alternator with openings to prevent material build-up and prevent fire
- Fire extinguisher

TIRES
17,5 x 25 12 lining L2 one piece - 14” Rim
17,5 x 25 12 lining L2 three pieces - 14 ”Rim
17,5 x 25 16 lining L3 three pieces - 14” Rim
20,5 x 25 16 lining L2/L3 three pieces - 17” Rim
17,5 x R25 radial, L2/L3 three pieces - 17” Rim
20,5 x R25 radial, L3 three pieces - 17” Rim

Others
Tool box
Rotating beacon
Buckets (see page 5)
Cigarette lighter / 12V

SiteWatch™ Fleet Monitoring System via cellular or satellite

CASE reserves the right to make improvements in design or changes in specifications at any time without incurring any obligation to install them on units previously sold. The specifications, descriptions and illustrative material contained herein correctly reflect the data known at the time of publication, but may vary from region to region and are subject to change without notice. The illustrations may include optional equipment and accessories and may not include all standard equipment.

COMUNICAÇÕES AMÉRICA LATINA ©

CCEIO126 – 03/2022 – Printed in Brazil

CaseCE.com.br

Business office
Garin – Buenos Aires
Rep. Argentina
Calle 28, 920
Panamericana km 38,5
Phone: +54 3327-4461000

Plants
Contagem – Minas Gerais – Brazil
Av. General David Sarnoff, 2237
Inconfidentes – Zip Code 32210-900 Phone: +5531 2104-3392

Sorocaba – São Paulo – Brazil
Av. Jerome Case, 1801
Inconfidentes – CEP 18087-220
Phone: +5515 3334-1700