Loader/Backhoe

Choice of 2 wheel or 4 wheel drive
Case 86 net horsepower (64 kW) turbo diesel
Loader lift to 7415 lb (3363 kg)
Backhoe dig depth to 19′6″ (5.9 m)

590 turbo

case®

590 turbo

590 turbo Basic Tractor

Engine

Make and model . . . . . **Case 4T-390**
Type of fuel . . . . . No. 2 diesel
No. of cylinders 4
Bore and stroke . . . . . 4.02″ x 4.72″ (102 mm x 120 mm)
Displacement . . . . . 239 in³ (3.92 L)
Compression ratio 17.5:1
Fuel induction . . . . . Injectors
Fuel supply . . . . . Injection pump
Air cleaner . . . . . Dry type — replacement element
Oil filter . . . . . Replaceable spin-on cartridge, full flow
Lubrication . . . . . Pressurized
Cooling system . . . . . Pressurized — 15 psi (103 kPa)
Horsepower
(1) Gross . . . . . 93 @ 2200 rpm (69 kW @ 2200 r/min)
(2) SAE Net . . . . . 86 @ 2200 rpm (64 kW @ 2200 r/min)
Max torque lbf-ft
(1) Gross . . . . . 263 @ 1400 rpm (356 Nm @ 1400 r/min)
(2) SAE Net . . . . . 215 @ 1400 rpm (291 Nm @ 1400 r/min)

(1) Gross engine horsepower or torque at flywheel per SAE Standard J1349.
(2) Net engine horsepower or torque at flywheel per SAE Standard J1349.

Electrical

System voltage . . . . . 12 volts, negative ground
Battery (1) . . Maintenance free, 685 cold cranking amps at 32°F (0°C)
Alternator . . . . . 65 amp

Power Train

Torque converter: Single stage hydrokinetic type, 2.63 to 1 stall ratio.

Transaxle: Power shuttle reversing unit with power actuated hydraulic clutches; fully synchronized 4-speed transmission; rear axle differential with pedal actuated differential lock; inboard planetary final reduction drive.

Brakes: Individual or simultaneous foot operated, hydraulic actuated, inboard mounted, self-adjusting, wet-disc service brakes. Over-center hand-operated wet-disc parking brake.

4 wheel drive: Operator engages front wheel mechanical drive by lever located on front control console; front wheels have outboard planetary final drive.

Axle Rating (Manufacturer's)

Front . . . . . 55,000 lb (24 948 kg)

Axle Oscillation

Front . . . . . 20°
Rear . . . . . Fixed

Steering

Power steering . . . . . Hydrostatic
Hydraulic pump: Front-mounted, positive displacement, gear type pump
Pump capacity . . . . . 31 gpm @ 2200 rpm @ 2750 psi (117 L/min @ 2200 r/min @ 18 961 kPa)
Main relief setting . . . . . 2500 + 100 - 50 psi (17 238 + 700 – 350 kPa)
Steering system: Utilizes same hydraulic pump as the hydraulic system. Steering system is a load sensing, supply-on-demand system that requires a maximum of 3.5 gpm (13 L/min) when turning wheels from stop to stop. Excess oil not being utilized by steering system is then made available to equipment hydraulic system.

Turning ratio, stop to stop . . . . 3.6 turns
Steering cylinder . . . . double acting (1)
2WD . . . . . 2.75″ dia x 6.7″ stroke (70 mm dia x 170 mm stroke)
4WD . . . . . 2.6″ dia x 8.6″ stroke (65 mm dia x 218 mm stroke)

Service Capacities

	U.S.	Liters
Cooling system		
w/heater	19.5 qt	18.5
w/o heater	18.8 qt	17.8
Fuel tank	33 gal	125
Engine oil		
w/filter	11.6 qt	11.0
Transaxle (includes shuttle, transmission, differential, final drives, brakes) —		
w/filter	47.6 qt	45
w/o filter	45.4 qt	43
total system	57.1 qt	54
Hydraulic reservoir		
w/filter	22 gal	83.3
w/o filter	21 gal	79.5
total system	34 gal	128.7
Planetaries— each (4WD)	1.1 qt	1.0
Differential (4WD)	7 qt	6.6
Brake system	1 pt	0.4

Travel Speeds — mph (km/h)

Engine at full throttle, 19.5L x 24, 10PR rear tires.

	1st	2nd	3rd	4th
Forward	3.7	6.2	14.1	24.7
	(6.0)	(9.9)	(22.7)	(39.9)
Reverse	4.4	7.4	16.8	29.6
	(7.2)	(11.9)	(27.1)	(47.8)

Approximate Shipping Weights

Note: Specifications taken with 11L x 16 front tires, 19.5L x 24 rear tires, ROPS canopy and standard equipment unless otherwise specified.

Loader/Backhoe (Less buckets)*

15′6″ (4.7 m) backhoe . . . . . 13,820 lb (6269 kg)
Extendahoe . . . . . 14,685 lb (6661 kg)
4WD . . . . . add 600 lb (272 kg)
Cab . . . . . add 480 lb (218 kg)

* For total unit weight, add weights for loader bucket (from 590 turbo Loader, Loader Bucket Sizes and Weights), backhoe bucket (from 590 turbo Backhoe, Backhoe Bucket Sizes and Weights), 4WD and Cab as appropriate.

590 turbo Loader

Hydraulic System

Hydraulic pump: Front-mounted, positive displacement, gear type, tandem pump.

Pump capacity:
31 gpm @ 2200 rpm @ 2750 psi
(117 L/min @ 2200 r/min @ 18 961 kPa)

Control valve main relief pressure . . . . . 2750 ± 50 psi (18 961 ± 350 kPa)

Filtration: 7-micron, full flow replaceable cartridge on return line. Condition indicator light for filter. 55 mesh wire screen on the suction side.

Loader control valve: 2- or 3-spool sectional valve with single lever control for lift and tilt, extra lever for 4-in-1 bucket clam or auxiliary hydraulics. Lift lever has positive hold "float" position and "return-to-dig" feature.

Loader cylinders:
Lift (2) . . . 3.5″ dia x 29.1″ stroke, 1.75″ rod (89 mm dia x 739 mm stroke, 44 mm rod)
Tilt (2) . . . . . 3″ dia x 20.6″ stroke, 1.5″ rod (76 mm dia x 522 mm stroke, 38 mm rod)
Clam (2) . . . . . 3″ dia x 9″ stroke, 1.75″ rod (76 mm dia x 229 mm stroke, 44 mm rod)

Loader Bucket Sizes and Weights

Width		Type	SAE Capacities				Weight	
			Heaped		Struck			
in	m		yd³	m³	yd³	m³	lb	kg
90	2.29	Long lip	1.25	.96	1.00	.76	1100	499
93	2.36	Short lip	1.25	.96	1.00	.76	805	365
93	2.36	4-in-1	1.10	.84	.88	.67	1515	687

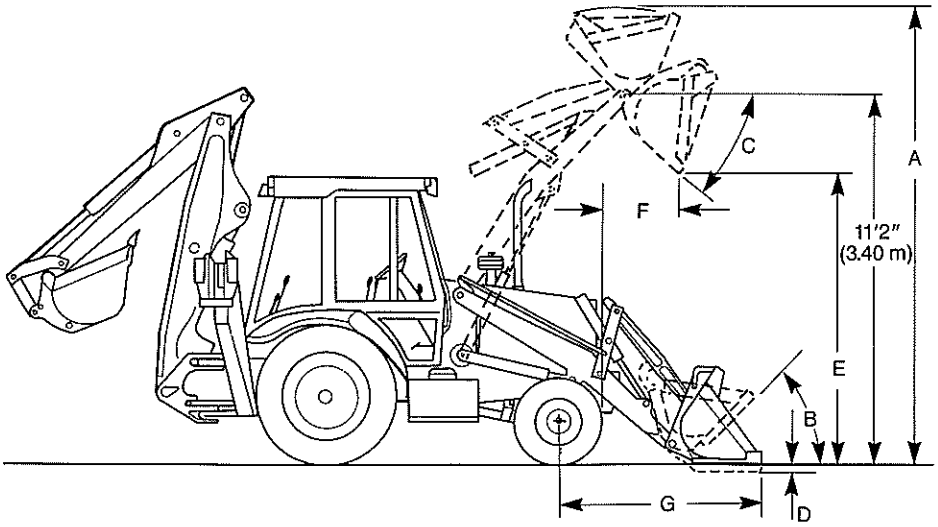

Operational Data

	General Purpose Buckets Short Lip	General Purpose Buckets Long Lip	4-IN-1® Bucket
Lift capacity to full height	7415 lb (3363 kg)	6700 lb (3039 kg)	6630 lb (3007 kg)
Height to bucket hinge pin - raised	11′2″ (3.40 m)	11′2″ (3.40 m)	11′2″ (3.40 m)
A - Overall operating height	14′1.5″ (4.31 m)	14′0.5″ (4.28 m)	14′0.5″ (4.28 m)
B - Bucket rollback @ groundline	41°	40°	38°
Breakout force	9350 lbf (41 591 N)	8500 lbf (37 810 N)	8700 lbf (38 700 N)
C - Dump angle at full height	45°	45°	53°
Maximum grading angle	107°	115°	108°
D - Digging depth below grade —			
bucket flat	4.7″ (119 mm)	4.2″ (107 mm)	6.4″ (163 mm)
clam open (dozing)	NA	NA	1.5″ (38 mm)
E - Dump clearance at full height, 45° dump			
bucket	9′1″ (2.77 m)	8′10″ (2.69 m)	9′2″ (2.79 m)
clam open	NA	NA	10′10″ (3.30 m)
F - Dump reach at full height, 45° dump			
bucket	24″ (610 mm)	27″ (686 mm)	29″ (737 mm)
clam open	NA	NA	15″ (381 mm)
G - Reach from front axle centerline, bucket on ground	70″ (1.78 m)	74″ (1.88 m)	72″ (1.83 m)
Cutting edge width			
bucket	93″ (2.36 m)	90″ (2.29 m)	93″ (2.36 m)
dozer (clam open)	NA	NA	92.3″ (2.34 m)
Maximum clam opening	NA	NA	37″ (940 mm)
Moldboard height	NA	NA	34″ (864 mm)
Raising time to full height	5.3 s	5.3 s	5.3 s
Bucket dumping time	1.1 s	1.1 s	1.1 s
Lowering time, power down	2.5 s	2.5 s	2.5 s
Lowering time, return-to-dig	2.6 s	2.6 s	2.6 s

590 turbo Backhoe

Hydraulic System

Hydraulic pump: Front-mounted, positive displacement, gear type, tandem pump.

Pump capacity:
10 gpm @ 2200 rpm @ 2750 psi (38 L/min @ 2200 r/min @ 18 961 kPa)
31 gpm @ 2200 rpm @ 2750 psi (117 L/min @ 2200 r/min @ 18 961 kPa)
Combined
41 gpm @ 2200 rpm @ 2750 psi (155 L/min @ 2200 r/min @ 18 961 kPa)

Control valve main relief pressure 2750 psi (18 961 kPa)

Filtration: 7 micron, full flow replaceable cartridge on return line. Condition indicator light for filter. 55 mesh wire screen on the suction side.

Backhoe control valve: 6- or 7-spool, sectional, open center, parallel circuits with regeneration — boom, dipper, bucket, swing, two stabilizers and Extendahoe, with pilot checks. Foot or optional hand swing. Sequencing swing valve with hydraulic cushioning.

Backhoe cylinders:
Stabilizers (2)5″ dia x 20.9″ stroke, 2.25″ rod (127 mm dia x 530 mm stroke, 57 mm rod)
Swing (2) 3.75″ dia x 12″ stroke, 2″ rod (95 mm dia x 305 mm stroke, 51 mm rod)
Boom (1) 5.5″ dia x 38.7″ stroke, 2.5″ rod (140 mm dia x 982 mm stroke, 64 mm rod)
Dipper (1) 5.5″ dia x 22.9″ stroke, 2.75″ rod (140 mm dia x 582 mm stroke, 70 mm rod)
Bucket (1) 3.5″ dia x 34.3″ stroke, 2.5″ rod (89 mm dia x 871 mm stroke, 64mm rod)
Dipper ext. (1)3″ dia x 48″ stroke, 1.75″ rod (76 mm dia x 1.22 m stroke, 44 mm rod)

Dig Depth

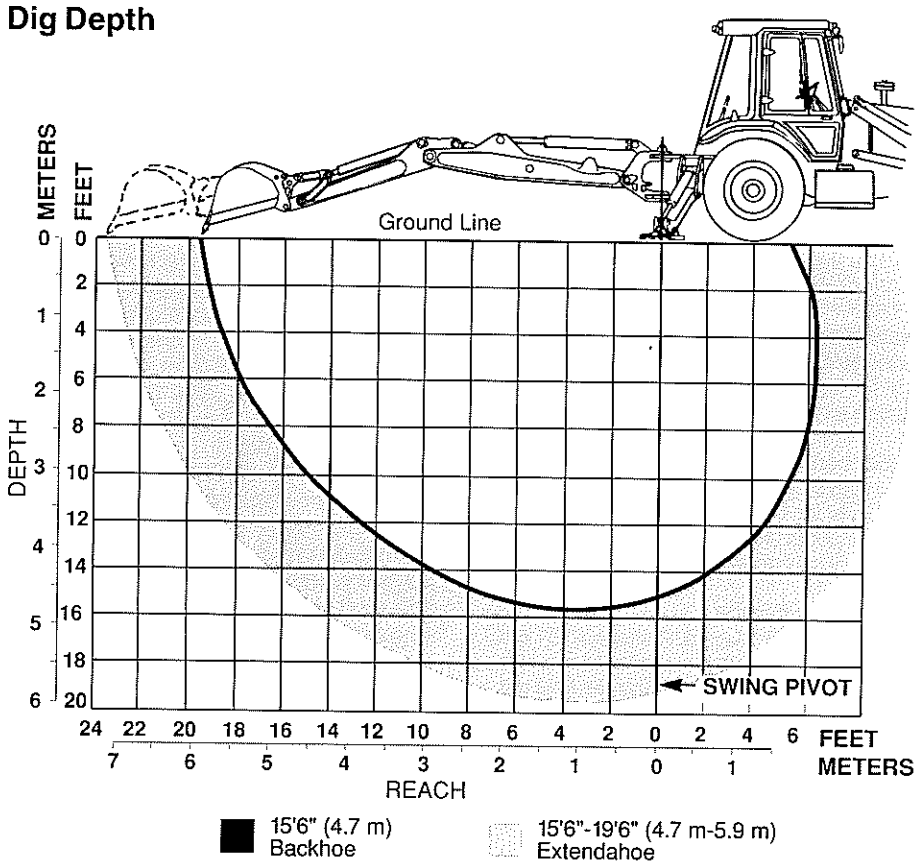

Backhoe Bucket Sizes and Weights

Width in	Width mm	Type	SAE Heaped Capacities ft³	SAE Heaped Capacities m³	Weight lb	Weight kg
12	305	Heavy duty universal trenching	2.90	0.08	316	143
16	406	Heavy duty universal trenching	3.60	0.10	352	160
18	457	Heavy duty universal trenching	4.30	0.12	366	166
24	610	Heavy duty universal trenching	6.4	0.18	440	200
30	762	Heavy duty universal trenching	8.65	0.24	510	231
36	914	Heavy duty universal trenching	10.80	0.31	588	267
24	610	High capacity trenching	9.1	0.26	446	202
30	762	High capacity trenching	11.9	0.34	467	212

Operational Data

	15′6″ (4.7 m) Backhoe	15′6″ -19′6″ (4.7 m - 5.9 m) Extendahoe® Retracted	Extended
Digging depth — SAE, 24″ (610 mm) flat bottom	15′6″ (4.72 m)	15′6″ (4.72 m)	19′6″ (5.94 m)
Digging depth — SAE, maximum	15′7.5″ (4.76 m)	15′7.5″ (4.76 m)	19′7.5″ (5.98 m)
Overall reach from rear axle centerline	23′2″ (7.06 m)	23′2″ (7.06 m)	27′1.5″ (8.27 m)
Overall reach from swing pivot	19′7″ (5.97 m)	19′7″ (5.97 m)	23′6.5″ (7.18 m)
Loading height	11′8.5″ (3.57 m)	11′8.5″ (3.57 m)	13′10.5″ (4.23 m)
Loading reach	9′4″ (2.84 m)	9′4″ (2.84 m)	12′ 8″ (3.88 m)
Swing arc	180°	180°	180°
Bucket rotation — #1 position	185°	180°	180°
#2 position	160°	160°	160°
Stabilizer spread — operating position	11′1″ (3.38 m)	11′1″ (3.38 m)	11′1″ (3.38 m)
transport position	7′2″ (2.18 m)	7′2″ (2.18 m)	7′2″ (2.18 m)
Digging force, bucket cylinder, SAE			
24″ (610 mm) Universal H.D. bucket w/coupler	11,500 lbf (51 155 N)	11,500 lbf (51 155 N)	11,500 lbf (51 155 N)
24″ (610 mm) Universal H.D. bucket w/links	13,000 lbf (57 827 N)	13,000 lbf (57 827 N)	13,000 lbf (57 827 N)
Digging force, dipper cylinder, SAE	7200 lbf (32 027 N)	7200 lbf (32 027 N)	4620 lbf (20 551 N)
Leveling angle (maximum slope on which backhoe will make vertical cut)	12.5°	12.5°	12.5°

Lift Capacity Charts —

1. Lift capacity figures on these charts are 87% of the maximum lift force per SAE Definition J31 and J49 at 2750 psi (18 961 kPa) system relief pressure.
2. Figures stated apply within 45° either side of prime mover.
3. Figures stated are determined by static tests and do not include dynamic factors.
4. Machine is equipped with 24″ (610 mm) heavy-duty trenching bucket.
5. Boom is angled at 65° for dipper lift capacities.
6. Loader bucket is on the ground.

15′6″ (4.72 m) Backhoe Lift Capacity — lb (kg)

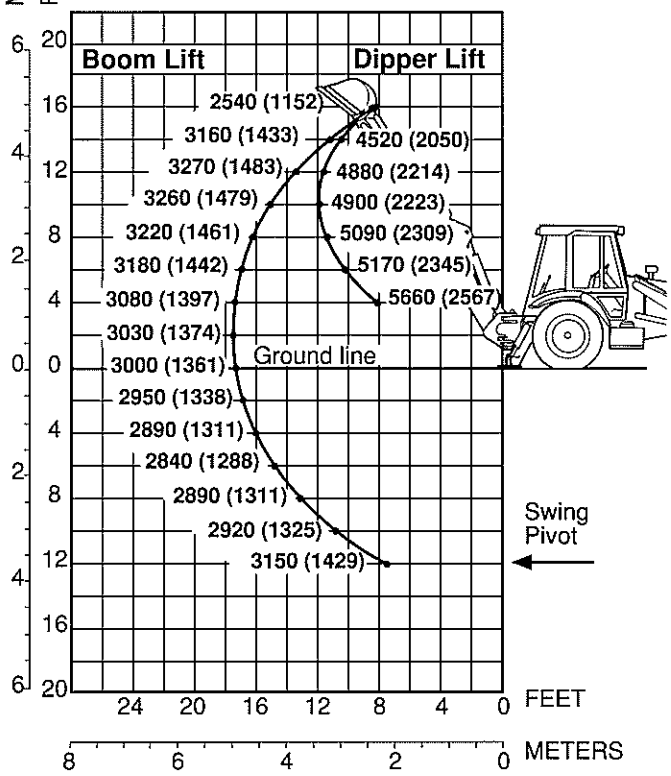

Extendahoe Lift Capacity (Dipper Extended) — lb (kg)

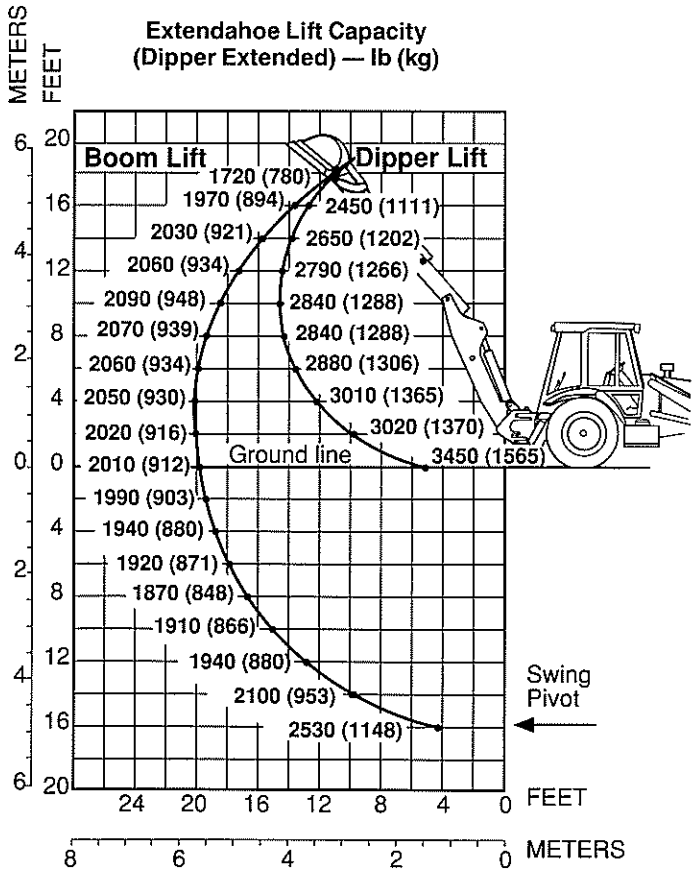

Extendahoe Lift Capacity (Dipper Retracted) — lb (kg)

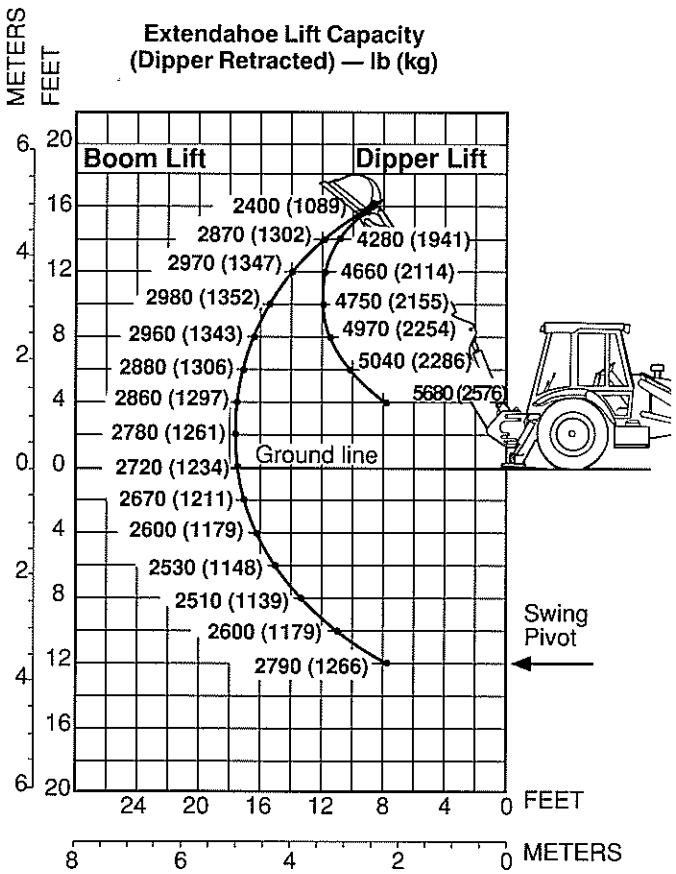

Dimensional Data

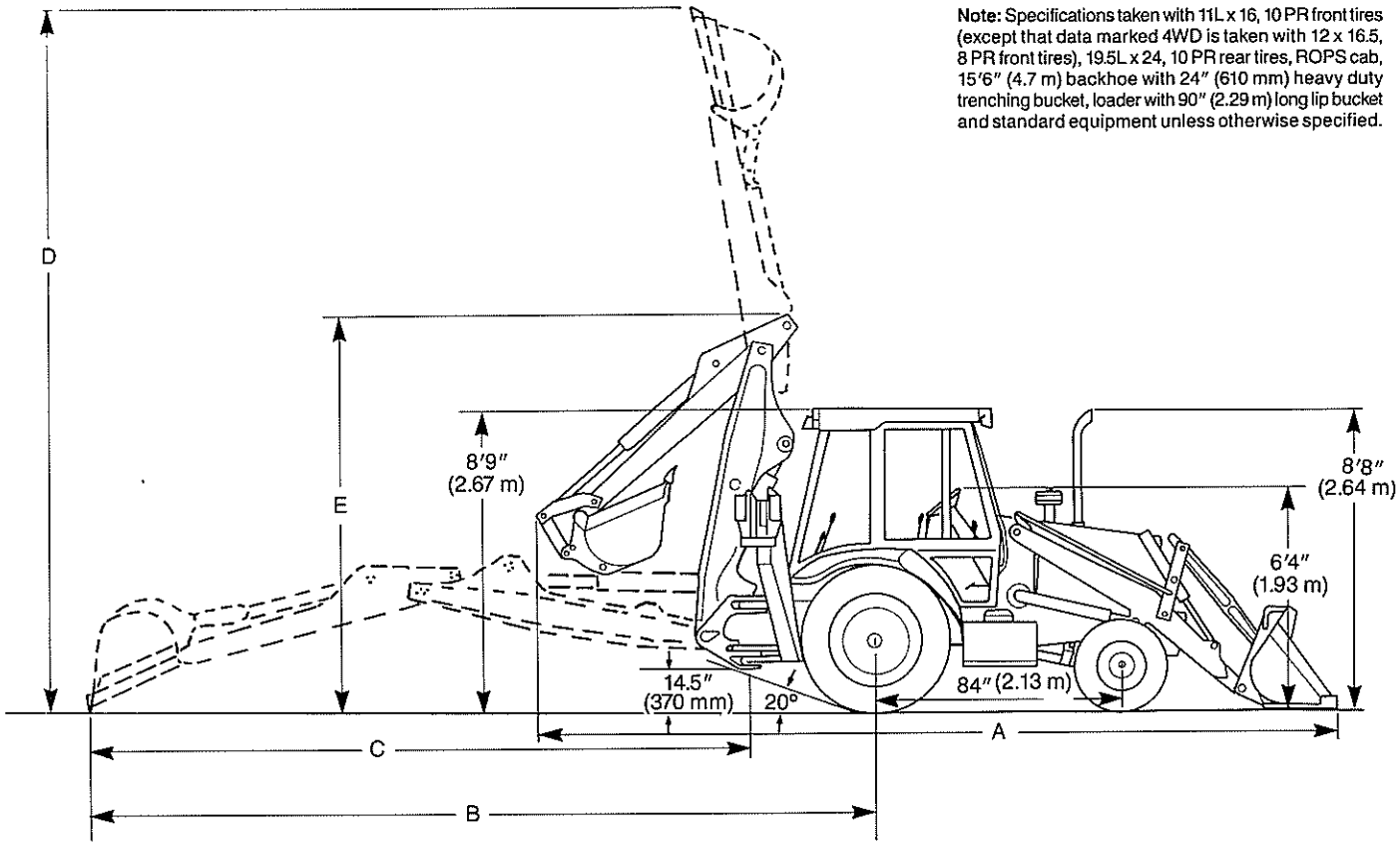

Note: Specifications taken with 11L x 16, 10 PR front tires (except that data marked 4WD is taken with 12 x 16.5, 8 PR front tires), 19.5L x 24, 10 PR rear tires, ROPS cab, 15′6″ (4.7 m) backhoe with 24″ (610 mm) heavy duty trenching bucket, loader with 90″ (2.29 m) long lip bucket and standard equipment unless otherwise specified.

Loader/Backhoe

	15′6″ (4.7 m) Backhoe	15′6″ - 19′6″ (4.7 m - 5.9 m) Extendahoe Retracted	Extended
A - Overall length — transport			
Short lip bucket	23′2″ (7.06 m)	23′2″ (7.06 m)	NA
Long lip bucket	23′6″ (7.16 m)	23′6″ (7.16 m)	NA
4-in-1 bucket	23′4″ (7.11 m)	23′4″ (7.11 m)	NA
Overall reach from			
B - rear axle centerline	23′2″ (7.06 m)	23′2″ (7.06 m)	27′1.5″ (8.27 m)
C - swing pivot	19′7″ (5.97 m)	19′7″ (5.97 m)	23′6.5″ (7.18 m)
D - Overall height, maximum	20′11″ (6.38 m)	20′11″ (6.38 m)	24′10″
E - Transport height	10′10″ (3.30 m)	11′3″ (3.43 m)	NA
Overall width, transport*	87.5″ (2.22 m)	87.5″ (2.22 m)	87.5″ (2.22 m)
Ground clearance at backhoe main frame	14.5″ (368 mm)	14.5″ (368 mm)	14.5″ (368 mm)
Angle of departure	20°	20°	20°
Height: to top of canopy	8′8″ (2.64 m)	8′8″ (2.64 m)	NA
to top of cab	8′9″ (2.67 m)	8′9″ (2.67 m)	NA
to top of exhaust stack	8′8″ (2.64 m)	8′8″ (2.64 m)	NA
to top of steering wheel	6′4″ (1.93 m)	6′4″ (1.93 m)	NA
Ground clearance (tractor transaxle)	12″ (305 mm)	12″ (305 mm)	NA
Front wheel tread			
(2WD)	71.5″ (1.82 m)	71.5″ (1.82 m)	NA
(4WD)	73.5″ (1.87 m)	73.5″ (1.87 m)	NA
Rear wheel tread	67″ (1.70 m)	67″ (1.70 m)	NA
Wheel base:			
(2WD)	84″ (2.13 m)	84″ (2.13 m)	NA
(4WD)	84.5″ (2.15 m)	84.5″ (2.15 m)	NA

* Excluding loader bucket

Equipment Data

Standard Equipment

Tractor

Air cleaner, dry type, replaceable cartridges
Anti-freeze solution to −34°F (−37°C)
Audible warnings: horn & backup alarm
Axle (front): 2WD, fixed tread, 11L x 16, 10 PR, (F3) Laborer *[48 psi (330 kPa)]* tires or mechanically driven 4WD, fixed tread, 12 x 16.5, 8 PR, Lug *[55 psi (380 kPa)]* tires
Brakes: service & parking (see Power Train section)
Clutch disconnects: hand operated on loader and shift levers
Electrical system, 12-volt
Emblem, SMV
Engine (see Engine section)
Engine oil filter, full flow
Fenders, rear
Floor plates
Fuel opening, lockable
Full lock-up package
Gauges: converter temperature, engine water temperature, fuel level, hourmeter, tachometer & voltmeter
Glove compartment
Hydraulic reservoir and cooler — common for steering, loader and backhoe
Lights, halogen: 2 front head, 2 rear work 2 red tail & brake, 4 amber flash & turn
Muffler, under hood with deflector
Power train (see Power Train section)
Precleaner, air intake
ROPS canopy on isolated operator's compartment
Seat with 1-lever turn-around, 2″ (51 mm) retractable, seat-mounted safety belt
Steering, hydrostatic
Throttles, hand and foot
Tilting engine hood, lockable
Tires (rear): 19.5 L x 24, 10 PR, (R4) Ind SureGrip *[24 psi (170 kPa)]*
Toolbox
Transmission suction tube guard
Warning lights: engine oil pressure, air cleaner restriction, alternator charge, hydraulic filter restriction, transmission filter restriction & brake-oil level
Wrapper, front rubber

Loader

Hydraulic system, complete
Indicator, bucket level
Loader (less bucket)
Return-to-dig
Self-leveling
Single lever control
Support strut, lift arm

15′6″ (4.7 m) Backhoe

Case Coupler
Hydraulic system, complete, including 3-lever, footswing control
Over-center, integral-chassis backhoe with 400 lb (181 kg) front counterweight (less bucket)
Stabilizers with 2-position cleated pads

15′6″ - 19′6″ (4.7 m-5.9 m) Extendahoe®

All tractor, loader and backhoe equipment
Hydraulic extending, integral-chassis Extendahoe with 900 lb (408 kg) front counterweight

Optional Equipment

Tractor

Audible operator-warning alarm system
Beacon, rotating
Counterweight, 900 lb (408 kg) front
Deluxe interior package includes deluxe adjustable suspension seat, floor mats, and fender & post covers
Dual batteries (use either or both)
Floor mat
Lights: 2 additional front & rear work
Mirrors: with canopy, 1 interior rear view; or with cab, 1 interior and 2 exterior rear view
95-A alternator
Paint, special
ROPS cab with pressurization: without heater & defogger; with heater & defogger or with heater, defogger & air conditioning—All cabs come with dome lights, floor mat, front and rear wipers, front and rear work lights, and combination tail, stop, directional and flasher lights
Safety belt, 3″ (76 mm)
Seat, suspension, with arm rests
Start kit, cold weather

Loader

Accessory hydraulics
Bucket teeth
Loader buckets (see Loader section)

Backhoe

Backhoe auxiliary hydraulics
Backhoe buckets (see Backhoe section)
Dual lever backhoe controls
Flat cemetary & rubber stabilizer pads

590 turbo Loader/Backhoe

Specifications Summary

Engine—86 net hp (64 kW) Case 4-cylinder, 239 in³ (3.9 L), liquid-cooled diesel, turbocharged; electric start

Power Train—torque converter; synchronized 4-speed transmission, power shuttle and differential lock in transaxle; mechanical 2WD or 4WD

Backhoe—15′6″ (4.7 m) or 15′6″ to 19′6″ (4.7 m to 5.9 m) telescoping Extendahoe®

Lift capacities @ full height, 15′6″ (4.7 m) backhoe:

- Dipper lift . . . . . 4520 lb (2050 kg)
- Boom lift . . . . . 2540 lb (1152 kg)

Digging force

- Bucket cylinder . . . . . 13,000 lbf (57 827 N)
- Dipper cylinder . . . . . 7200 lbf (32 027 N)

Loader—7415 lb (3363 kg) lift capacity; 9350 lbf (41.6 kN) breakout force

Loader bucket capacities

- 4-in-1 . . . . . 1.10 yd³(0.84 m³)
- General purpose . . . . . 1.25 yd³ (0.96 m³)

Sold and serviced by:

Note: All specifications are stated in accordance with SAE Standards or Recommended Practices, where applicable.

Important
J I Case Company reserves the right to change these specifications without notice and without incurring any obligation relating to such change. Unit illustrated is equipped with non-standard items.

Construction King, Extendahoe and 4-in-1 are trademarks of the J I Case Company.

J I Case
A Tenneco Company
700 State Street, Racine, WI 53404 U.S.A.

Form No. CE47091

©1991 J I Case Company

Printed in U.S.A.